承 认 书
SPECIFCATION FOR APPROVAL

客户名称 CUSTOMER: _____

品名 DESCRIPTION: 5240&5102条形连接器

料号 CUSERTOMER PART NO: C2505&C2506

客户确认 APPROVED SIGNATURES

核准 APPROVAL: _____ 日期 DATE: _____

工程 ENGINEERING: _____ 日期 DATE: _____

品管 QC: _____ 日期 DATE: _____

承认结果: ☐ 承认 ☐ 不承认 ☐ 重新送样

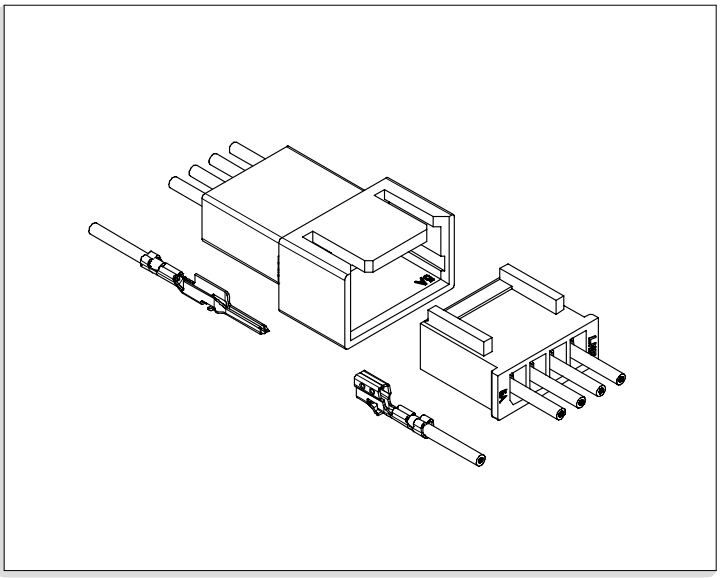

规格 Specifications

1. 极数 Poles: 2 to 4P
2. 额定电流 Current rating: 2.0A AC,DC
3. 额定电压 Voltage rating: 250V AC,DC
4. 温度范围 Temperature range: -25℃ to +105℃
   (含通电温度上升值)
   (Including temperature rise in applying electrical current)
5. 接触电阻 Contact resistance: 初期 Initial value / ≤20mΩ
   环境测试后 After environmental testing / ≤30mΩ
6. 绝缘电阻 Insulation resistance: ≥1000MΩ
7. 耐电压 Withstanding voltage: 1000V AC/minute
8. 适用线规 Applicable wire: AWG #28 to #22

目录(COVER) 1

料号说明(DESCRIPTION OF ITEM NUMBER) 2

系列说明和安装尺寸(Series illustrated and Mouting Measurement) 4

图纸(DRAWING) 7

产品性能测试(PERFORMANCE TEST) 14

实验报告(TEST REPORT) 18

认证(CERTIFICATION) 21

PA66 RoHS报告(PA66 RoHS REPORT) 32

端子 RoHS报告(TERMINAL RoHS REPORT) 42

MSDS 50

反馈与建议(FEEDBACK AND SUGGESTIONS) 58

制订 Edit:	王天	日期 DATE:	2024-05-15
审核 Check:	天琴	日期 DATE:	2024-05-15
批准 Approval:	季育文	日期 DATE:	2024-05-15

壳体料号说明 HOUSING

C 2506 - S H B 02 X2 - N* - * - ** - ** - ** - ** - **

A: Wire to Board Connectors
B: Board-in Connectors
C: Wire to Wire Connectors
D: Hard Splices Connectors
F: FFC/FPC Connectors
I : IDC

系列号 Series Number

特征类别(默认空)
Feature Category: S=锁片型

产品类别
Product Category: F=配件 Fitting
H=壳体 Housing
P=密封件 Water Proofing

同类别多型号序号 (默认空)
Same Series Different Type: B~ZZ

单列极数 The Pin Number of Single Row: 01~**

多列列数 The Pin Number of Several Row: X2~X* (无则空)

M为堵孔，*为堵孔序号(例M1.2.5)(无则空)

壳体材料
Housing Material: 9=U=UL
1=PA66
2=PA66灼热丝-G
3=PA46
4=PA6T
5=PA9T
6=PBT
7=PPO
8=LCP
10=PC
11=PA66无卤灼热丝
12=PA66高灼热丝
13=PA66增强

壳体材料特性
Housing Material Specialty: ZG=灼热丝加玻纤
V2 UL阻燃等级标准(默认不注明)
V0 UL阻燃等级标准
Z=灼热丝是按照(IEC60695/GB/T5169)标准,
符合GWIT750℃,GWFI960℃

壳体颜色
Housing Color: TG=透明绿 Transparent Green
OR=橙色 Orange
P=粉色 Pink
R=红色 Red
VI=紫色 Violet
Y=黄色 Yellow
GY=灰色 Gray
BK=黑色 Black
G=绿色 Green
BL=蓝色 Blue
BR=棕色 Brown
TR=透明白 Transparent
W=白色 White
EC=米白 ECRU
壳体材料2/3/4/5/8/12默认米色
壳体材料7默认黑色
壳体材料1/6/9/10/11默认白色
壳体材料13默认透明
(默认可为空)

无卤标识
无卤产品加HF,有卤默认为空

客户专用代码
Customer Special Code: 表示和常规件不同,用来代表某个客户

备注:*部分内容只在产品标签中体现! 其他特殊要求位置不固定

5240&5102料号说明 Description of item number

端子料号说明 TERMINAL

C 2506 N - T 2 2 A 30 5 P 2(*)Y-1-*(*)*

A: Wire to Board Connectors
B: Board-in Connectors
C: Wire to Wire Connectors
F: FFC/FPC Connectors
I : IDC
D: Chain Terminals and Splices

系列号 Series Number

K=直形带锁 N=直形
Z=旗形带锁 Q=旗形
X=横插带锁 H=横插
Y=叉形端子 J=插片
R=环形端子 C=圆形
G=接线端子
W=鲨鱼齿端子
特征类别(默认空) B=子弹形端子
Feature Category: U=耳扒形端子

产品类别 Product Category: T=端子 Terminal

同类别多型号序号 (默认空)
Same Series Different Type: 1~9

同型号多尺寸序号 (默认空)
Same Type Different size: 1~9

适用线规(默认空) A=小脚 B=中脚
Applicable Wire: C=高脚 D=大脚

料带厚度单位: mm X100 (0.3X100=30 默认空)

配合厚度单位: mm X10 (0.5X10=5 默认空)
注: 所有<灰色>说明, 为D系列分类附加料号及说明!

Z=紫铜 Copper
S=不锈钢 Stainless Steel
P=磷青铜 Phos.Bronze
材质 Material: B=黄铜 Brass

0=素材酸洗 None
1=镀镍 Nickel Plating
2=镀亮锡 Tin Plating
3=镀镍氩光锡 Matt Tin-Nickel Plating
4=镀铅锡 Tin-Lead Plating
5=镀铜锡 Tin-Cu Plating
6=镀镍银 Silver-Nickel Plating
7=镀镍金 Gold-Nickel Plating
8=镀镍局部金 Nickel-Gold
9=镀亮锡局部金 Half Gold-Tin Plating
表面处理
Surface processing: 10=镀镍亮锡 Tin-Nickel Plating

镀层厚度(默认为空)

包装说明: Y=有字、N=无字

包装方式: 0=散装(袋装)、1=盘装、4=八角盘装、5=编带装 (常规默认为空)

包装数量: -**K: 客户定制数量,默认数量为空

客户专用代码
Customer Special Code: 表示和常规件不同,用来代表某个客户

其他说明: 如(U)=UL、软、低铅等

备注:表面处理内容只在产品标签中体现! 其他特殊要求位置不固定

其它料号说明 OTHER

P 0001 - B

P: Other Types

产品序号 Product Number

同型号序号 Same Series Different Type: B~Z
(默认空)

系列说明 Series illustrated

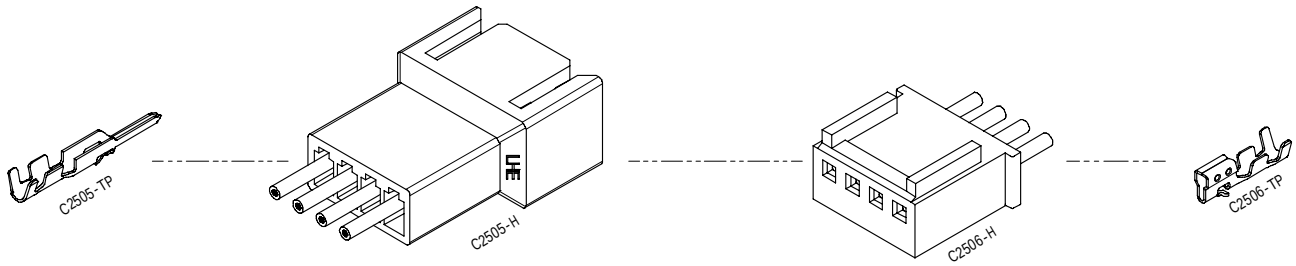

LHE® 浙江联和电子有限公司			
品名	5240&5102列说明	比例	7 : 4
料号	C2505&C2506系列说明	未注公差(mm)	
图号	LHE\GC-4	>0~3	±0.12
材料	/	>3~18	±0.15
制图	王天2024-05-15	>18~50	±0.3
审核	天琴2024-05-15	>50~120	±0.5
批准	季育文2024-05-15	X°	±3°
视角		X.X°	±0.5°

安装尺寸 Mounting Measurement

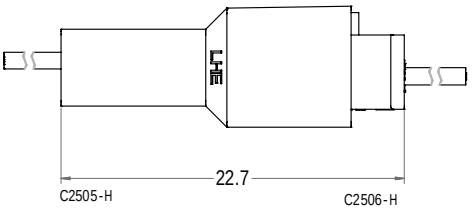

LHE® 浙江联和电子有限公司			
品名	5240&5102安装图示	比例	2 : 1
料号	C2505&C2506安装图示	未注公差(mm)	
图号	LHE\GC-5	>0~3	±0.12
材料	/	>3~18	±0.15
制图	王天2024-05-15	>18~50	±0.3
审核	天琴2024-05-15	>50~120	±0.5
批准	季育文2024-05-15	X°	±3°
视角		X.X°	±0.5°

REV	修订记录	修改人	修订日期
1	增加产品特征示例	YF	2024/12/25

产品示例

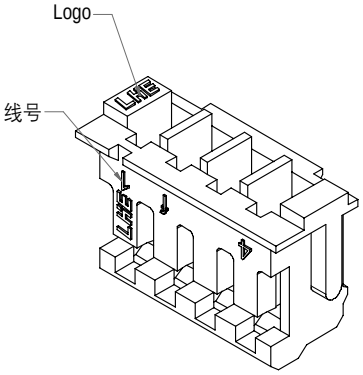

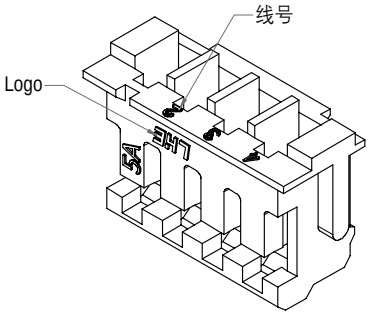

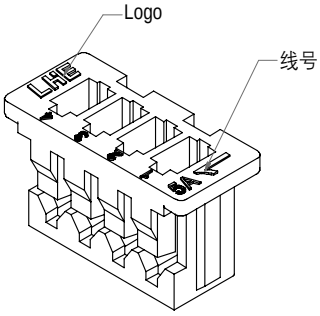

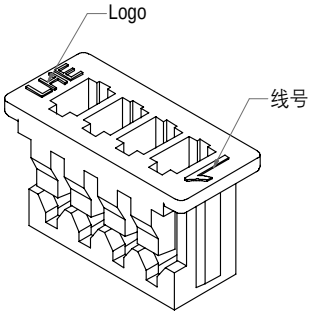

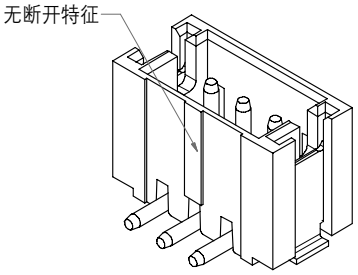

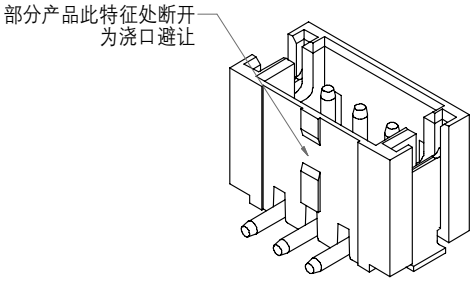

注意:
如：刻字，线号，注塑口等特征
且该特征不影响实际使用情况下位置不固定
恕不另行通告，详情请垂询本公司。

LHE® 浙江联和电子有限公司			
品名	示例说明	比例	4:1
料号	示例说明	未注公差(mm)	
图号	LHE\GC-6	>0~3	±0.12
材料	/	>3~18	±0.15
制图	王夫 2024-12-25	>18~50	±0.3
审核	天琴 2024-12-25	>50~120	±0.5
批准	季育文 2024-12-25	X°	±3°
视角		X.X°	±0.5°

5240型连接器承认书图面

名　　称	材　　料	附　　注
基座 Housing	Nylon 66 UL94V-0	White(白色)

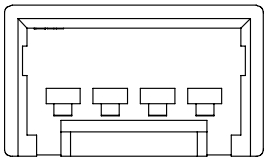

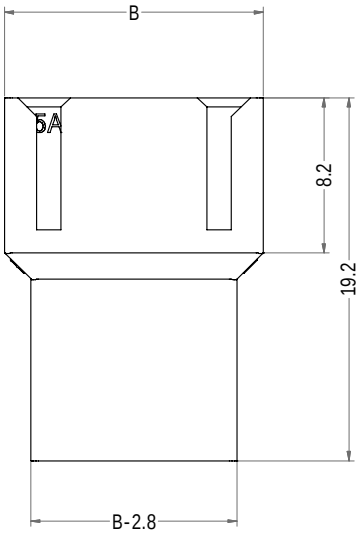

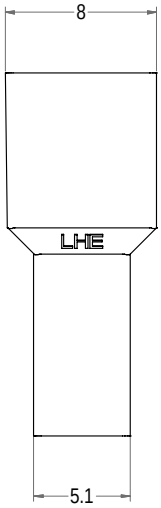

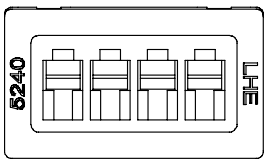

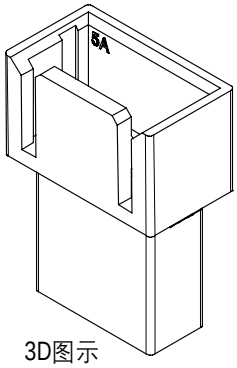

3D图示

Poles	Part No.	Description	DIM=A	DIM=B
2	C2505-H02	5240-2A	2.50	8.70
3	C2505-H03	5240-3A	5.00	11.20
4	C2505-H04	5240-4A	7.50	13.70

LHE® 浙江联和电子有限公司			
品名	5240-A	比例	5 : 2
料号	C2505-H	未注公差(mm)	
图号	LHE\GC-7	>0~3	±0.12
材料	Nylon 66 UL94V-0	>3~18	±0.15
制图	王天2024-05-15	>18~50	±0.3
审核	天琴2024-05-15	>50~120	±0.5
批准	季育文2024-05-15	X°	±3°
视角		X.X°	±0.5°

名　　称	材　　料	附　　注
基座 Housing	Nylon 66 UL94V-0	White(白色)

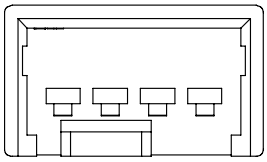

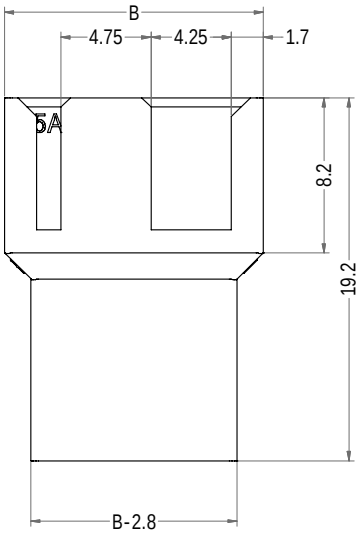

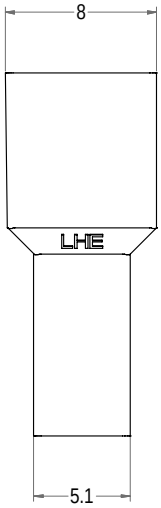

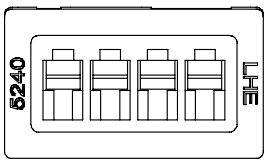

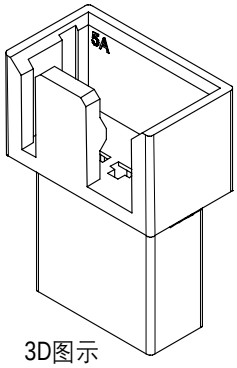

3D图示

Poles	Part No.	Description	DIM=A	DIM=B
4	C2505-HB04	5240B-4A	7.50	13.70

LHE® 浙江联和电子有限公司			
品名	5240B-A	比例	5 : 2
料号	C2505-HB	未注公差(mm)	
图号	LHE\GC-8	>0~3	±0.12
材料	Nylon 66 UL94V-0	>3~18	±0.15
制图	王天2024-05-15	>18~50	±0.3
审核	天琴2024-05-15	>50~120	±0.5
批准	季育文2024-05-15	X°	±3°
视角		X.X°	±0.5°

名　　称	材　　料	附　　注
端子 Terminal	Phosphor Bronze	

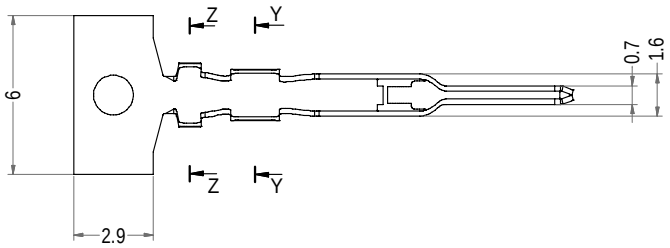

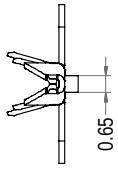

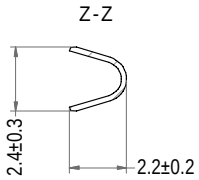

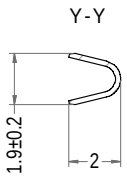

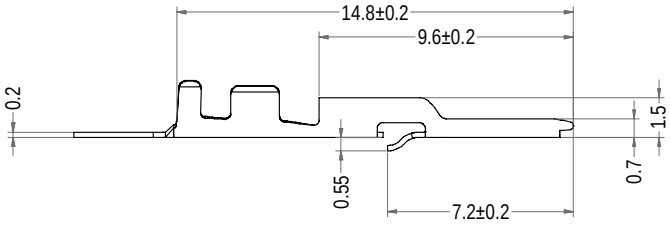

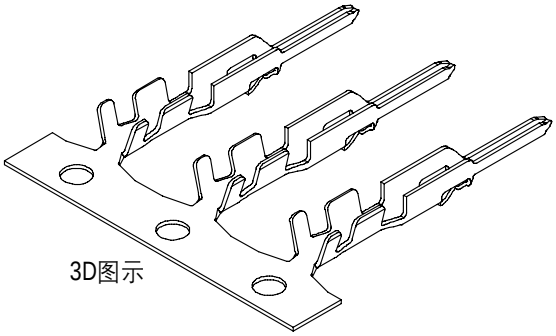

Part No.	Description	Finish	Qty/reel
C2505-TP	5240-AT	Tin	11,000pcs

LHE® 浙江联和电子有限公司			
品名	5240-AT	比例	7:2
料号	C2505-T	未注公差(mm)	
图号	LHE\GC-9	>0~3	±0.12
材料	Phosphor Bronze	>3~18	±0.15
制图	王天2024-05-15	>18~50	±0.3
审核	天琴2024-05-15	>50~120	±0.5
批准	季育文2024-05-15	X°	±3°
视角		X.X°	±0.5°

5102型连接器承认书图面

名　　称	材　　料	附　　注
基座 Housing	Nylon 66 UL94V-0	White(白色)

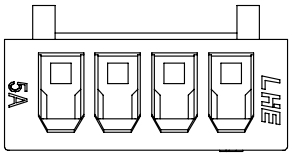

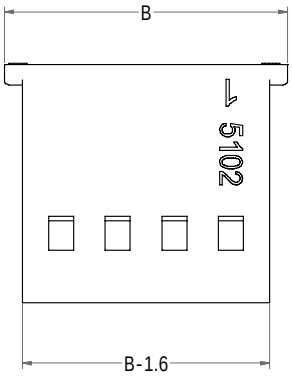

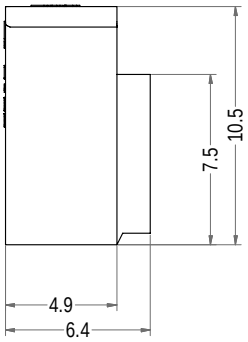

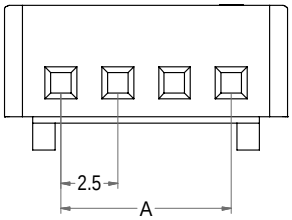

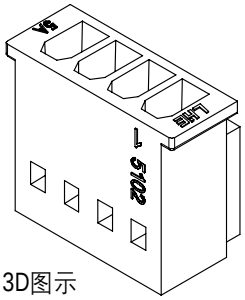

3D图示

Poles	Part No.	Description	DIM=A	DIM=B
2	C2506-H02	5102-2Y	2.50	7.50
3	C2506-H03	5102-3Y	5.00	10.00
4	C2506-H04	5102-4Y	7.50	12.50

LHE® 浙江联和电子有限公司			
品名	5102-Y	比例	3:1
料号	C2506-H	未注公差(mm)	
图号	LHE\GC-10	>0~3	±0.12
材料	Nylon 66 UL94V-0	>3~18	±0.15
制图	王天2024-05-15	>18~50	±0.3
审核	天琴2024-05-15	>50~120	±0.5
批准	季育文2024-05-15	X°	±3°
视角		X.X°	±0.5°

5102型连接器承认书图面

名　　称	材　　料	附　　注
端子 Terminal	Phosphor Bronze	

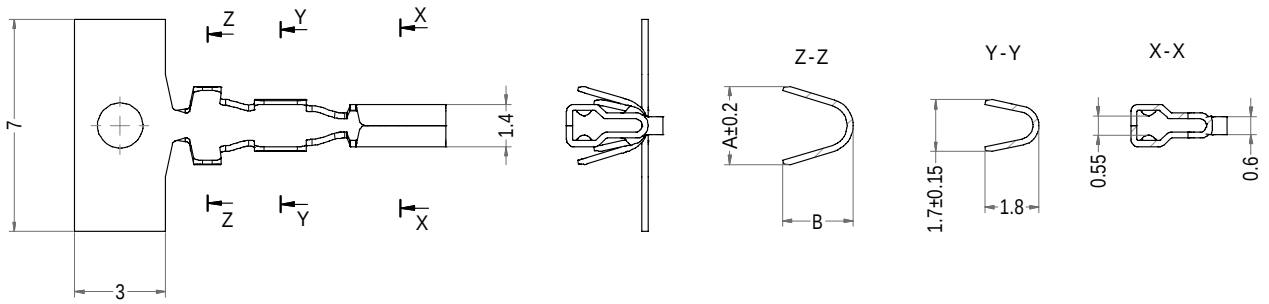

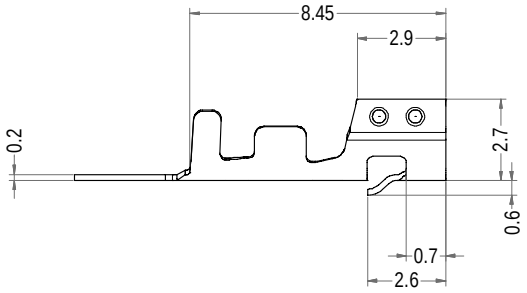

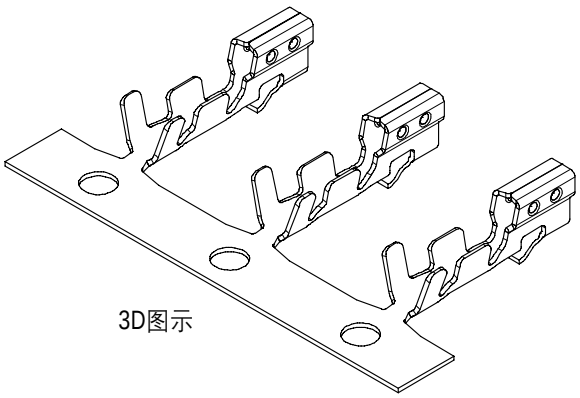

3D图示

Part No.	Description	A	B	Finish	Qty/reel
C2506-TP	5102-YT11	2.80	2.80	Tin	8,000pcs
C2506-T12P	5102-YT12	2.60	2.30	Tin	8,000pcs

LHE® 浙江联和电子有限公司			
品名	5102-YT	比例	4:1
料号	C2506-T	未注公差(mm)	
图号	LHE\GC-11	>0~3	±0.12
材料	Phosphor Bronze	>3~18	±0.15
制图	王天2024-05-15	>18~50	±0.3
审核	天琴2024-05-15	>50~120	±0.5
批准	季育文2024-05-15	X°	±3°
视角		X.X°	±0.5°

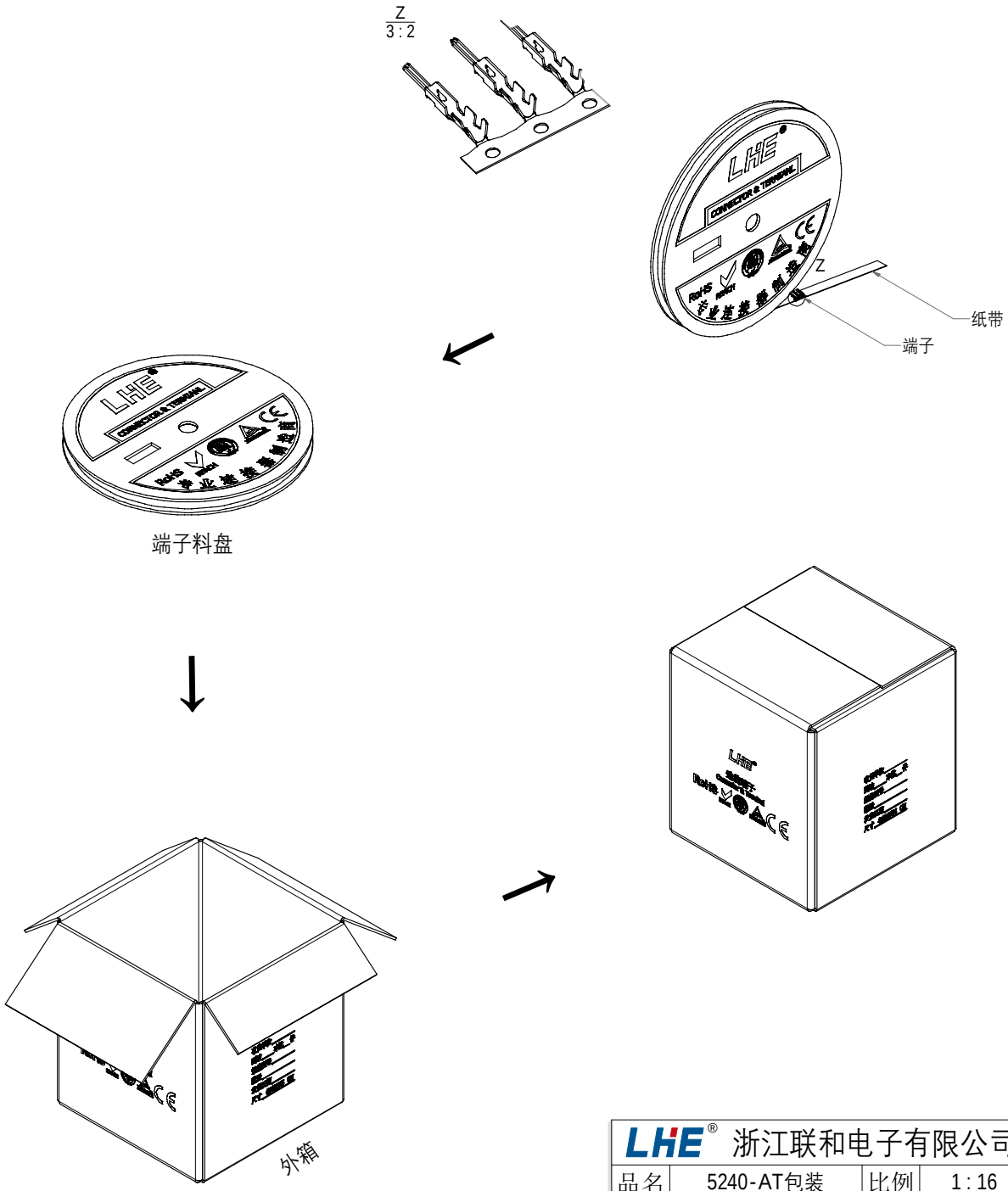

注释:
1. 产品尺寸请参照5240-T图纸.
2. 此示意图为产品出料方式进行说明.
3. 胶带、PE袋未在图纸中体现,请以实物为准.

Part No.	Description	Qty/reel	Reel/caton
C2505-TN	5240-AT	11000pcs	19/Reel

LHE® 浙江联和电子有限公司			
品名	5240-AT包装	比例	1 : 16
料号	C2505-T包装	未注公差(mm)	
图号	LHE\GC-12	>0~3	±0.12
材料	/	>3~18	±0.15
制图	王天2024-05-15	>18~50	±0.3
审核	天琴2024-05-15	>50~120	±0.5
批准	季育文2024-05-15	X°	±3°
视角		X.X°	±0.5°

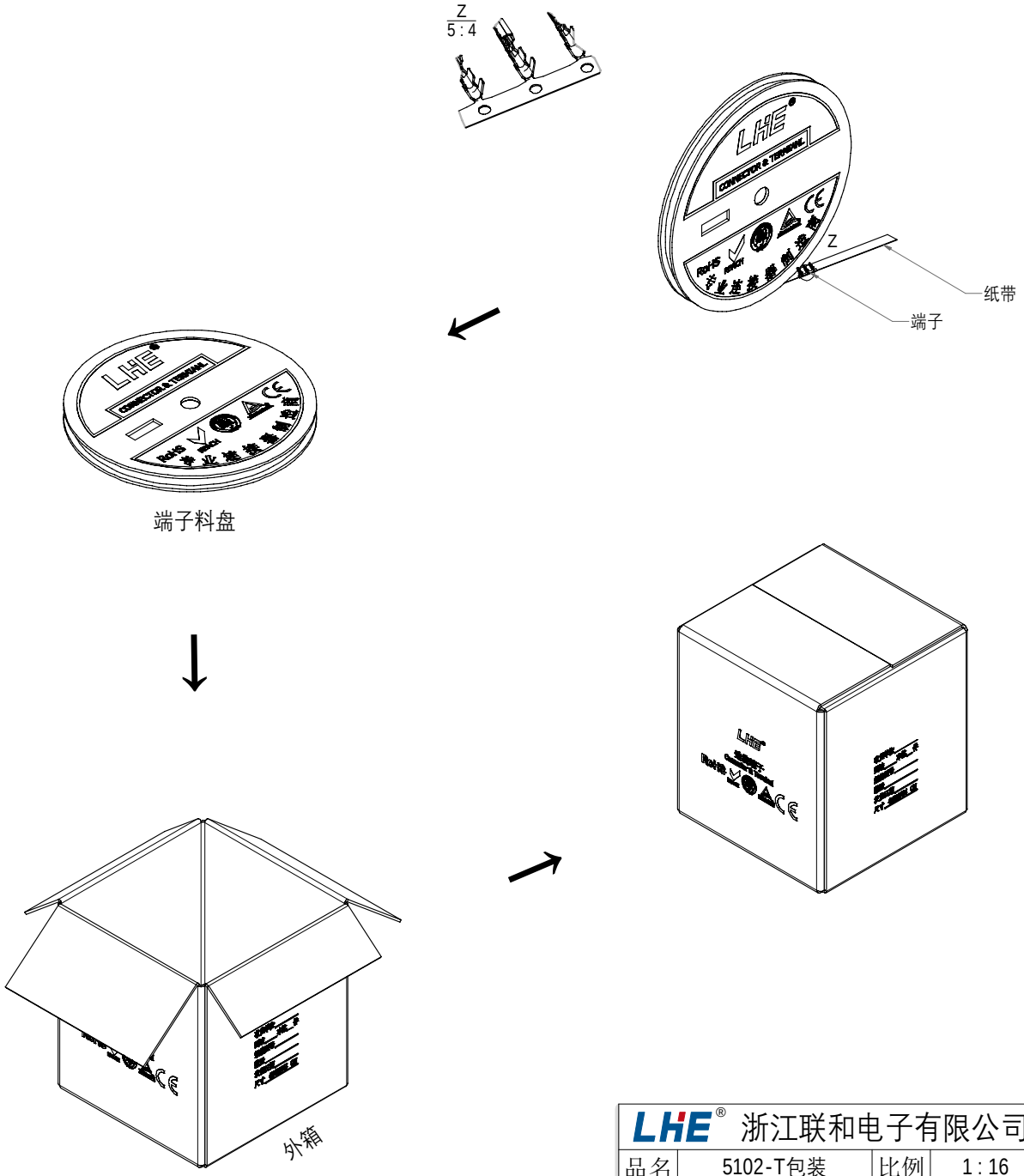

注释:
1. 产品尺寸请参照5102-NT图纸.
2. 此示意图为产品出料方式进行说明.
3. 胶带、PE袋未在图纸中体现,请以实物为准.

Part No.	Description	Qty/reel	Reel/caton
C2506-TN	5102-YT	8000pcs	24/Reel

LHE® 浙江联和电子有限公司			
品名	5102-T包装	比例	1 : 16
料号	C2506-T包装	未注公差(mm)	
图号	LHE\GC-13	>0~3	±0.12
材料	/	>3~18	±0.15
制图	王天2024-05-15	>18~50	±0.3
审核	天琴2024-05-15	>50~120	±0.5
批准	季育文2024-05-15	X°	±3°
视角		X.X°	±0.5°

项目 Item	测试条件 Test Condition	规格要求 Requirement
1.外观 Appearance	目测 Visual by eye 视力 Light: >1.0 照明 Lamp: 200~300Lx 目测距离 Space: 0.3~0.5m GB/T 5095.1 Method 1a	1.塑料件表面应无明显疤痕、凹陷、开裂及影响使用的变形。 Plastic part:smooth and flat surface without discolor,broken,crack distortion defects is acceptable. 2.金属件表面无锈蚀、氧化、无明显的机械损伤等缺陷。 Metal part:btight and even surface without rust,oxide,fog and obvious physical damage defects is acceptable. 3.导线表面清洁、无破损等缺陷，印字及标志清晰。 Wire:clearing surface without discolor,broken defects,indistinct words and mark is acceptable.
2. 壳体/端子固定力 Terminal/Housing Retention Force	固定连接器或测力计，在连接器轴线方向施加规定的拉力；速度不大于25mm/min。 Apply axial pull out force at the speed rate of not more 25mm/min on the pin assembled in the housing. GB/T 5095.8 Method 15d/EIA-364-29B 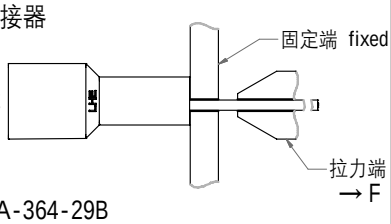	≥15N
3. 插入力与拔出力 Insertion and Withdrawal Force	单PIN相配的接触器以1mm/s~5mm/s的速度沿接插器轴线方向插入和拔出。 Insertion and withdraw single contact at the speed rate of 1mm/s~5mm/s. 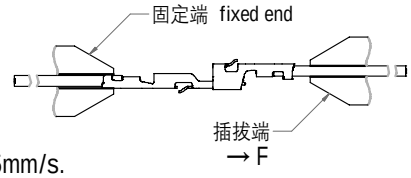 相配的连接器以1mm/s~5mm/s的速度沿接插器轴线方向插入和拔出。 Insertion and withdraw connectors at the speed rate of 1mm/s~5mm/s. GB/T 5095.7 Method 13b/EIA-364-13B 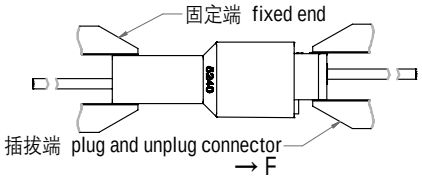	极数 Poles / 插入力(最大值N) Insertion(N Max) / 拔出力(最小值N) Withdrawal(N Min) 1st / 1st 1 / 10.0 / 2.0
4. 针的固定力 Pin Retention Force	固定连接器或测力计，在连接器轴线方向对针施加规定的推力；速度不大于25mm/min。 Apply axial push out force at the speed rate of not more 25mm/minute on the terminal assembled in the base. GB/T 5095.8 Method 15a/ EIA-364-29B	--
5. 压着部位抗拉强度 Crimping Pull Out Force	在试验装置夹头中固定测试样品，在连接的轴线方向施加拉力；速度不大于25mm/min。 Fix the crimped terminal, apply axial pull out force on the wire at the speed rate of not more 25mm/min. GB/T5095.8 Method 16d/EIA-364-08B 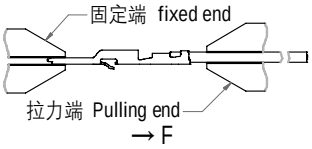	AWG.22# ≥30N AWG.24# ≥20N AWG.26# ≥15N AWG.28# ≥10N

项目 Item	测试条件 Test Condition	规格要求 Requirement	
6. 机械振动 Vibration	插合连接器, 串联在一直流电源上, 电流100mA; 并模拟正常工作状态, 振频为10~55Hz、振幅1.5mm; 每一轴线扫频循环次数10次、2小时。 Frequency: 10~55Hz Amplitude: ±1.5mm Duration: 2 hours in each X,Y,Z axes GB/T 5095.4 Method 6d/EIA-364-28D	外观 Appearance	无损伤 No Damage
7.机械冲击 Shock	连接器相配,沿X,Y.Z三轴正反方向各冲击3次(总共18次), 在测试过程中通以100mA电流。 冲击强度:490m/s² 持续时间:11ms Mated connectors and subject to the following shock conditions,3times of shock shall be applied for each 6 directions along 3 mutually perpendicular axes,passing DC 100mA current during the test(Total of 18 shocks)Test Pulse: Half Sine Peak Value:490m/s² Duration:11ms GB/T 5095.4 Method 6c/EIA-364-27B	接触电阻 Contact Resistance LLCR	≤30mΩ
		中断 Intermittence	≤1μ sec
8. 机械寿命 Repeated insertion/withdrawal	以每分钟插拔10次的速率, 插拔50次。 When mated up to 50 cycles repeatedly by the rate of 10 cycles per minute. GB/T 5095.5 Method 9a/EIA-364-09C	外观 Appearance	无损伤 No Damage
		接触电阻 Contact Resistance LLCR	≤30mΩ
9. 接触电阻 Contact Resistance	插合连接器,用小功率电路进行测试。 Mate connectors,measure by dry circuit. GB/T 5095.2 Method 2a/EIA-364-23B	≤20mΩ	
10. 绝缘电阻 Insulation Resistance	在相邻接触件之间或地线之间, 用500V DC电压进行测试。 Apply 500V DC between adjacent terminal or ground. GB/T 5095.2 Method 3a/EIA-364-21C	≥1000MΩ	
11. 耐电压 Dielectric Strength	相邻接触件之间或地线之间施加50Hz 1000V AC(有效值), 漏电流1mA的电压作用, 时间1min。 Mate connectors, apply 1000V AC for 1 minute between adjacent terminal or ground. GB/T 5095.2 Method 4a/EIA-364-20B	无击穿和飞弧现象 No Breakdown	
12. 温度上升 Temperature Rise	插合连接器, 通以最大允许电流。 GB/T 5095.3 Method 5a/EIA-364-70A	温度最大上升 Temperature Rise	≤30℃
13. 耐高温 Heat Resistance	连接器配合后, 于+105℃±2℃的空气中放置96小时, 然后再回到室温中放置1~2小时测定 Mated connectors are exposed to a temperature of +105℃±2℃ for 96 hours. GB/T 5095.6 Method 11i /EIA-364-17B	外观 Appearance	无损伤 No Damage
14. 耐低温 Clod Resistance	连接器配合后, 于-25℃±2℃的空气中放置96小时, 然后再回到室温中放置1~2小时测定 Mated connectors are exposed to a temperature of -25℃±2℃ for 96 hours. GB/T 5095.6 Method 11i /EIA-364-17B	接触电阻 Contact Resistance LLCR	≤30mΩ

项目 Item	测试条件 Test Condition	规格要求 Requirement	
15. 恒定湿热 Humidity	温度 Temperature: 40±2℃ 相对湿度 Relative Humidity: 90%~95% 搁置时间 Duration: 96h, 取出恢复2小时后检查 GB/T 5095.6 Method 11c/EIA-364-31B	外观 Appearance	无损伤 No Damage
		耐电压 Dielectric Strength	1000V
16. 温度循环 Temperature cycle	把测试样品放入高低温试验箱中,按下列步骤调试温度: a)在-25℃±2℃的恒温条件下放置0.5小时; b)在+105℃±2℃的恒温条件下放置0.5小时; 从a)到b)为一个循环周期,共进行5个循环。恢复1h后检查。 状态转换时间不多于1小时。 Mated connectors are exposed to 5 cycles of: a)-25℃±2℃ 0.5hour b)+105℃±2℃ 0.5hour GB/T 5095.6 method 11d/EIA-364-32C	绝缘电阻 Insulation Resistance	≥1000MΩ
		接触电阻 Contact Resistance LLCR	≤30mΩ
17.盐雾 Salt Spray	把先冲后镀*的测试样品从试验箱顶悬挂下来, 采用浓度为5%±1(质量百分比)的氯化钠溶液, 连续雾化24小时, 试验后用流动的蒸馏水轻轻洗去表面沉积物。在常温常驻湿条件下恢复1~2小时。 24 hour exposure to a saltspray from the 5%±1 solution. GB/T 5095.6 Method 11f/EIA-364-26B	外观无损伤(五金件应无露出底金属的严重锈蚀; 使用预镀的型材, 其落料面允许有不影响其性能的轻微腐蚀。) Appearance:No Damage(No erosion with material exposed.And with plating material,slight erosion on the cutting surface acceptable)	
18. 可焊性 Solderability	把测试样品需要焊接的部位浸入焊锡炉中(锡炉温度235℃±5℃)2±0.5秒钟。 Soldering time: 2±0.5 sec Solder Temperature:235℃±5℃ GB/T 5095.6 Method 12a/EIA-364-52	上锡率≥90% 90% of immersed area must show no voids,pin holes	
19. 耐焊接热 Resistance to Soldering Heat	把测试样品需要焊接的部位浸入焊锡炉中(锡炉温度260℃±5℃); 5±1秒钟后, 在正常的条件下恢复1小时。 Soldering time: 5±1 sec Solder Temperature:260℃±5℃ GB/T 5095.6 Method 12d/EIA-364-56A	外观 Appearance	无损伤 No Damage
20. 灼热丝测试 Glow Wire (只针对GWIT750℃产品 Only for GWIT750℃products)	750℃灼热丝顶部接触试验样品, 接触时间:(30±1) s 接近和离开速率: 10mm/s~25mm/s 灼热丝进入或贯穿试验样品深度:(7±0.5) mm 750℃ elow wire contacts with mated connector. Time: (30±1) s Speed of closing to and leaving: 10mm/s-25mm/s Depth that glow wire penetrates mated connector: (7±0.5) mm GB/T 5169.10	1.试验样品燃烧时间不超过2s。 The time that mated connector burns is not more than 2s. 2、灼热丝离开后的30s内样件无火焰或灼热情况, 且无滴落物或滴落物不燃烧。 30s after glow wire leaves mated con nector, it does not burn or is no incand escence and it does not fall something or falling something does not burn.	
21. 耐酸性(二氧化硫) Acid resistance(SO_2)	连接器闭合连接,3±1ppm, 40±2℃.96 小时 Mated connector,3士1ppm,40±2℃ Duration 96hours GB/T2423.51	接触电阻 Contact Resistance LLCR	≤30mΩ

项目 Item	测试条件 Test Condition	规格要求 Requirement	
22.氨气测试 Ammonia test	连接器闭合连接，放置于浓度为 25 mL/L的 3%的 NH_3的空气中7小时 Mated connector is put into atmosphere that rated 25 ml/L of 3% NH_3 for 7 hours GB/T2423.51	接触电阻 Contact Resistance LLCR	≤30mΩ

* 先冲后镀为定制端子。常规端子为先镀后冲，无法通过盐雾试验。

制订 Edit: 王天　　日期 DATE: 2024-05-15

审核 Check: 天琴　　日期 DATE: 2024-05-15

批准 Approval: 季育文　　日期 DATE: 2024-05-15

LHE 浙江联和电子有限公司

产品性能测试报告

品名 (DESCRIPTION)	5240&5102	测定者 (Inspector)	在斟	测定条件 (Test Condition)	温度: 22℃ (Temperature)
料号 (MODEL NO.)	C2505&C2506	日期 (Date)	2024/1/23		湿度: 65% (Humidity)

试验项目 (Test Title)	规格 (Specification)		测定值(Data) X1	X2	X3	X4	X5	COM
带线胶壳之间插拔力 <带内扣> (Connector assemble with cable, mating and unmating force with latch)	2 pin Unit: N Mating force 30 max. Unmating force 7.0min.	插入(Mating)	16.75	17.50	17.75	16.25	16.00	OK
		拔出(Unmating)	15.25	15.50	15.25	15.00	16.50	OK
	4 pin Unit: N Mating force 50 max. Unmating force 11min.	插入(Mating)	28.50	27.00	28.00	26.00	29.50	OK
		拔出(Unmating)	22.50	24.00	25.50	23.50	23.00	OK
端子和胶壳的固定力 (Terminal Retention in housing)	15N Min(YT)		28.50	31.50	30.00	30.50	29.50	OK
端子和胶壳的固定力 (Terminal Retention in housing)	15N Min(AT)		32.50	35.00	33.50	34.00	34.50	OK
端子之间针单独插入力 (Single terminal insertion force)	10N Max		4.50	4.75	4.25	4.00	4.50	OK
端子之间单独拔出力 (Single terminal withdrawal force)	2N Min		3.25	3.50	2.50	2.75	3.00	OK
盐雾试验 (Salt spray)	雾化16小时，后镀YT不能有腐蚀现象 (Spray time:16 hours,YT stamping then plating must not corrode)		PASS	PASS	PASS	PASS	PASS	OK
	接触电阻 (Contact Resistance)	30mΩ Max	11.7	13.2	12.4	12.9	11.5	OK
盐雾试验 (Salt spray)	雾化16小时，后镀AT不能有腐蚀现象 (Spray time:16 hours,AT stamping then plating must not corrode)		PASS	PASS	PASS	PASS	PASS	OK
	接触电阻 (Contact Resistance)	30mΩ Max	10.3	10.5	9.9	11.9	9.7	OK
温度循环 (Temperature cycling)	外观 (Appearanc)	无损伤 (No damage)	PASS	PASS	PASS	PASS	PASS	OK
	接触电阻 (Contact Resistance)	30mΩ Max	12.8	11.9	13.4	13.9	12.4	OK
	绝缘电阻 (Insulation Resistance)	1000MΩ Min	PASS	PASS	PASS	PASS	PASS	OK
	耐电压 (Dielectric Withstanding Voltage)	1000V,AC/minute	PASS	PASS	PASS	PASS	PASS	OK

浙江联和电子有限公司
ZHEJIANG LIANHE ELECTRONICS CO.,LTD.

可 靠 性 试 验 报 告
RELIABILITY TEST REPORT

日期：2026-05-09

针焰实验(Needle flame experiment)

测试目的(Test Purposes)	确定PA66 94V-0样条在针焰条件下是否符合标准要求 Determine whether the PA66 94V-0 sample bar meets the standard requirements under the needle flame condition.
测试条件(Test Conditions)	温度35±2℃ Temperature 35 ± 2 ℃;
测试方法(Test Method)	对样条施加试验火焰持续时间为12s。火焰高度12mm±1mm The test flame was applied to the spline for a duration of 12 seconds. The flame height was 12mm ± 1mm.
参照标准(With Reference to	GB/T5169.5-2008
判定标准(Test Standard)	a.试验样品无火焰和灼热，并且规定的铺底层或包装绢纸没有起燃 b.在移开针焰后，试验样品和周围的零部件的火焰或灼热在30s之内熄灭，即tb<30s,而且周围的零部件没有完全烧毁，以及规定的铺底层或包装绢纸没有起燃。 a. The test sample has no flame and heat, and the specified bedding or wrapping paper does not ignite b. After removing the needle flame, the flame or burning heat of the test sample and the surrounding parts will be extinguished within 30s, i.e. TB < 30s, and the surrounding parts are not completely burnt out, and the specified underlay or wrapping silk paper does not ignite
测试设备(Test Equipment)	针焰试验机 Needle flame testing machine
测试程序（Test Program）	外观检验→固定样品→试验启动 →观察→记录起火时间

测试结果(The test results)

测试图片Test Picture

序号 number	1	2	3	4	5	备注（Remarks）
样品 sample	无起燃 Noignition	无起燃 Noignition	无起燃 Noignition	无起燃 Noignition	无起燃 Noignition	/
结果results	OK	OK	OK	OK	OK	
序号 number	6	7	8	9	10	
样品 sample	无起燃 Noignition	无起燃 Noignition	无起燃 Noignition	无起燃 Noignition	无起燃 Noignition	/
结果results	OK	OK	OK	OK	OK	/

结果判定(The results determine)

样品数量 The Number of Samples 10PCS	合格数 The Number of competency	10	结 果Results OK
	不合格数Unqualified	0	
	外观Appearances	OK	

核 准 (Approved) :陈 浙 海　　测 试 人 (Testing Person) :玉夫

浙江联和电子有限公司
ZHEJIANG LIANHE ELECTRONICS CO.,LTD.

可 靠 性 试 验 报 告
RELIABILITY TEST REPORT

日期：2025-02-12

灼热丝实验(Glow wire experiment)

测试目的(Test Purposes)	确定AB11069W-S16-10灼热丝材料产品在灼热丝条件下是否符合标准要求 Determine if the AB11069W-S16-10 Does the product meet the standard requirements under the condition of glow wire
测试条件(Test Conditions)	灼热丝起燃温度(GWIT)记录值为起始温度加 25K(对于 900℃和 930℃则是 30K,960℃记为 GWIT:>960/厚度) Gwire ignition temperature(GWIT)recorded value is the starting temperature plus 25K(for 900℃ and 930℃ is 30K,960℃ is GWIT:>960 / thickness)
测试方法(Test Method)	施加试验火焰持续时间为 30s。试验温度 750℃ The test flame duration was 30 s. Test temperature: 750 ℃
参照标准(With Reference to)	根据 GB/T 5169.12-2006 及 GB/T 5169.13-2013 执行.
判定标准(Test Standard)	试验样条无火焰，并且规定的铺底层或包装绢纸没有起燃。 The test sample has no flame and heat, and the specified bedding or wrapping paper does not ignite
测试设备Test Equipment）	灼热丝试验仪（Glow-wire tester）
测试程序（Test Program）	外观检验→固定样条→试验启动 →观察→记录起火时间 Appearance inspection→Fixing the splines→Starting the test→Observation→Recording the ignition time

测试结果 (The test results)

测试图片Test Picture

材料规格 material specification	试片尺寸(长X宽X厚) 单位:mm	起始温度(℃)	样品	起燃时间(Ti) 单位:秒	熄灭时间(Te) 单位:秒	现象记录 Phenomenon Record	GWIT 判定:PASS 或 FAIL	GWFI 判定:PASS 或 FAIL
A66V0 002	60X60X2.5	750	第 1 个	不起燃	/	不起燃,无滴落 Non-flammable, no dripping	PASS (GWIT:775/2.5)	PASS (GWFI:750/2.5)
			第 2 个	不起燃	/	不起燃,无滴落 Non-flammable, no dripping		
			第 3 个	不起燃	/	不起燃,无滴落 Non-flammable, no dripping		
A66V0 002	60X60X2.5	800	第 1 个	6	32	接触后很快就起燃,熔融但无滴落,起燃后 32S 熄灭 It ignited shortly after contact, melted but without dripping. It extinguished 32 seconds after ignition.	FALL	PASS (GWFI:800/2.5)
			第 2 个	5	31	接触后很快就起燃,熔融但无滴落,起燃后 32S 熄灭 It ignited shortly after contact, melted but without dripping. It extinguished 32 seconds after ignition.		
			第 3 个	6	33	接触后很快就起燃,熔融但无滴落,起燃后 33S 熄灭 It ignited shortly after contact, melted but without dripping. It extinguished 33 seconds after ignition.		
A66V0 002	60X60X2.5	850	第 1 个	2	47	接触后很快就起燃,熔融但无滴落,起燃后 46S 熄灭 It ignited shortly after contact, melted but without dripping. It extinguished 46 seconds after ignition.	FALL	PASS (GWFI:850/2.5)
			第 2 个	1	53	接触后很快就起燃,熔融但无滴落,起燃后 51S 熄灭 It ignited shortly after contact, melted but without dripping. It extinguished 51 seconds after ignition.		
			第 3 个	2	51	接触后很快就起燃,熔融但无滴落,起燃后 52S 熄灭 It ignited shortly after contact, melted but without dripping. It extinguished 52 seconds after ignition.		
A66V0 002	60X60X2.5	960	第 1 个	1	51	接触后很快就起燃,熔融但无滴落,起燃后 50S 熄灭 It ignited shortly after contact, melted but without dripping. It extinguished 50 seconds after ignition.	FALL	PASS (GWFI:960/2.5)
			第 2 个	1	52	接触后很快就起燃,熔融但无滴落,起燃后 51S 熄灭 It ignited shortly after contact, melted but without dripping. It extinguished 51 seconds after ignition.		
			第 3 个	1	49	接触后很快就起燃,熔融但无滴落,起燃后 50S 熄灭 It ignited shortly after contact, melted but without dripping. It extinguished 50 seconds after ignition.		

测试须知 (The test requirements)

1.灼热丝起燃温度(GWIT)记录值为起始温度加 25K(对于 900℃和 930℃则是 30K，960℃记为 GWIT:>960/厚度)
The recorded value of the ignition temperature of the hot wire (GWIT) is the initial temperature plus 25K (for 900℃ and 930℃ it is 30K, and for 960℃ it is GWIT: > 960 / thickness)
2.产品在移开灼热丝之后持续燃烧的时间≤30s，即 Te≤Ta（施加时间）+30S，并且包装娟纸没有起燃，则灼热丝可燃性指数（GWFI）即为 PASS，记录为 GWFI:温度/厚度：
2.The duration for which the product continues to burn after the hot wire is removed shall be ≤ 30 seconds, that is, Te ≤ Ta (application time) + 30 seconds, and if the packaging paper does not catch fire, then the flammability index of the hot wire (GWFI) is PASS, and it is recorded as GWFI: temperature/thickness:
3.本实验灼热丝 Ta(施加时间)为 30S，则 Te≤60S
In this experiment, the duration of the hot wire heating (Ta) is 30 seconds, and therefore Te is less than or equal to 60 seconds.
4.如果 3 个其中有 1 个不合格则最终结果为不合格：
4.If one of the three is unqualified, the final result is deemed unqualified.

核 准 (Approved) :陈 浙 海　　测 试 人 (Testing Person) :玉夫

Component - Plastics

File Number: E331274

Celanese (Suzhou) Engineering Plastics Co Ltd
N. 155 Song Bei Road, Suzhou Industrial Park, Suzhou Jiangsu 215024 CN

FRIANYL: A3 RV0 (a)(b)(f2)

Polyamide 66 (PA66), pellets, unfilled

(a) - Virgin and regrind up to 50% by weight inclusive, have the same basic material characteristics.
(b) - Virgin and regrind up to 100% by weight inclusive, have the same basic characteristics with respect to flammability.
(f2) - Subjected to one or more of the following tests: Ultraviolet Light, Water Exposure or Immersion in accordance with UL 746C, where the acceptability for outdoor use is to be determined by UL.

Flammability	Value	Test Method
Flame Rating		UL 94 IEC 60695-11-10, -20
0.25 mm, ALL	V-0	
0.38 mm, ALL	V-0	
0.75 mm, ALL	V-0	
1.5 mm, ALL	V-0	
3.0 mm, ALL	V-0	
Glow Wire Flammability Index		IEC 60695-2-12
0.75 mm	960 °C	
1.5 mm	960 °C	
3.0 mm	960 °C	
Glow Wire Ignition Temperature		IEC 60695-2-13
0.75 mm	775 °C	
1.5 mm	775 °C	
3.0 mm	775 °C	
Electrical	**Value**	**Test Method**
Hot-wire Ignition (HWI)		UL 746
0.25 mm	PLC 4	
0.38 mm	PLC 4	
0.75 mm	PLC 4	
1.5 mm	PLC 4	
3.0 mm	PLC 3	
High Amp Arc Ignition (HAI)		UL 746
0.25 mm	PLC 1	
0.38 mm	PLC 1	
0.75 mm	PLC 0	
1.5 mm	PLC 0	
3.0 mm	PLC 0	
Comparative Tracking Index (CTI)	PLC 0	UL 746
Dielectric Strength	25 kV/mm	ASTM D149 IEC 60243-1
High Voltage Arc Tracking Rate (HVTR)	PLC 0	UL 746
Inclined-Plane Tracking (1.0 kV)	60 min	ASTM D2303
Volume Resistivity	1.0E+13 ohms-cm	ASTM D257 IEC 60093
Arc Resistance	PLC 5	ASTM D495

Form Number: E331274-103610472

UL and the UL logo are trademarks of UL LLC Copyright © 2018 All Rights Reserved. | www.ul.com

Report Date: 6/22/2009
Last Revised: 2018-02-12

ANSI/UL 94 small-scale test data does not pertain to building materials, furnishings and related contents. ANSI/UL 94 small-scale test data is intended solely for determining the flammability of plastic materials used in the components and parts of end-product devices and appliances, where the acceptability of the combination is determined by UL.

Component - Plastics

File Number: E331274

Thermal	Value	Test Method
RTI Elec		UL 746
0.25 mm	65.0 °C	
0.38 mm	130 °C	
0.75 mm	130 °C	
1.5 mm	130 °C	
3.0 mm	130 °C	
RTI Imp		UL 746
0.25 mm	65.0 °C	
0.38 mm	105 °C	
0.75 mm	105 °C	
1.5 mm	105 °C	
3.0 mm	105 °C	
RTI Str		UL 746
0.25 mm	65.0 °C	
0.38 mm	115 °C	
0.75 mm	120 °C	
1.5 mm	120 °C	
3.0 mm	120 °C	
Physical	**Value**	**Test Method**
Dimensional Stability	0.0 %	ASTM D1042 ISO 2796
Outdoor Suitability	f2	UL 746C

Notice of Disclaimer

By accessing this Yellow Card data information sheet and the database from which this information was generated (the "Yellow Card"), the user acknowledges and accepts the terms and conditions upon which this Yellow Card is made available. This Yellow Card, the database from which it was generated, and all related materials, support, and services, are made available by UL for use only by permission and "as is", without any representation or warranty of any kind, express or implied, including but not limited to any implied warranties of merchantability, fitness for a particular purpose or that the products identified in this Yellow Card will satisfy the user's requirements. UL cannot and does not warrant that the data contained in this Yellow Card is current, accurate, or complete. The user must independently confirm the conformance of any product to the applicable standards or requirements with the manufacturer of that product. Permission to access this Yellow Card may be withdrawn at any time by UL in its sole discretion. The identification of products and companies on this Yellow Card does not in any way imply endorsement of those products or companies by UL. UL does not assume and expressly disclaims, liability to any person for any loss or damage (including lost profits, lost savings, or any indirect, special, incidental, consequential or punitive damages whether or not UL has been advised of the possibility of such damages) arising out of, or in connection with, the use of this Yellow Card regardless of the cause or causes of such loss or damage.

Form Number: E331274-103610472

UL and the UL logo are trademarks of UL LLC Copyright © 2018 All Rights Reserved. | www.ul.com

Report Date: 6/22/2009
Last Revised: 2018-02-12

ANSI/UL 94 small-scale test data does not pertain to building materials, furnishings and related contents. ANSI/UL 94 small-scale test data is intended solely for determining the flammability of plastic materials used in the components and parts of end-product devices and appliances, where the acceptability of the combination is determined by UL.

UL Product iQ™

ECBT2.E364711 - Connectors for Use in Data, Signal, Control and Power Applications - Component

Connectors for Use in Data, Signal, Control and Power Applications - Component

See General Information for Connectors for Use in Data, Signal, Control and Power Applications - Component

ZHEJIANG LIANHE ELECTRONIC CO LTD E364711
Chuangxin Road, YueQing Bay Port Zone
Yueqing, Zhejiang 325600 CHINA
Connector, Model(s) 1.58-LHE f/b 2 , f/b 1 thru 12, f/b A2 or AW., 1.58-LHE f/b 2 thru 6, f/b A2 or AW

Connector, Model(s) 1.58-LHE followed by 2, followed by 1 thru 12, followed by A(T).

Connector, Model(s) 1.58-LHE, f/b 2 thru 6 , f/b A(T)., 1.58-LHE, f/b 2 thru 6, f/b Y(T), 1.58-LHE, f/b 2, f/b 1 thru 12 , f/b Y(T)., 2510-LHE f/b 2 , f/b 1 thru 12, f/b A2 or AW, 2510-LHE f/b 2 thru 6, f/b A2 or AW

Connector, Model(s) 2510-LHE followed by 2, followed by 1 thru 12, followed by A(T)

Connector, Model(s) 2510-LHE, f/b 2 thru 6 , f/b A(T), 2510-LHE, f/b 2 thru 6, f/b Y(T), 2510-LHE, f/b 2, f/b 1 thru 12 , f/b Y(T), 5.08-LHE f/b 2 , f/b 1 thru 12, f/b A2 or AW, 5.08-LHE f/b 2 thru 6, f/b A2 or AW

Connector, Model(s) 5.08-LHE followed by 2, followed by 1 thru 12, followed by A(T)

Connector, Model(s) 5.08-LHE, f/b 2 thru 6 , f/b A(T), 5.08-LHE, f/b 2 thru 6, f/b Y(T), 5.08-LHE, f/b 2, f/b 1 thru 12 , f/b Y(T), 51005-LHE f/b 2 , f/b 1 thru 12, f/b A2 or AW, 51005-LHE f/b 2 thru 6, f/b A2 or AW

Connector, Model(s) 51005-LHE followed by 2, followed by 1 thru 12, followed by A(T)

Connector, Model(s) 51005-LHE, f/b 2 thru 6 , f/b A(T), 51005-LHE, f/b 2 thru 6, f/b Y(T), 51005-LHE, f/b 2, f/b 1 thru 12 , f/b Y (T), 51006-LHE f/b 2 , f/b 1 thru 12, f/b A2 or AW, 51006-LHE f/b 2 thru 6, f/b A2 or AW

Connector, Model(s) 51006-LHE followed by 2, followed by 1 thru 12, followed by A(T)

Connector, Model(s) 51006-LHE, f/b 2 thru 6 , f/b A(T), 51006-LHE, f/b 2 thru 6, f/b Y(T), 51006-LHE, f/b 2, f/b 1 thru 12 , f/b Y (T), 5102-LHE f/b 2 , f/b 1 thru 12, f/b A2 or AW, 5102-LHE f/b 2 thru 6, f/b A2 or AW

Connector, Model(s) 5102-LHE followed by 2, followed by 1 thru 12, followed by A(T)

Connector, Model(s) 5102-LHE, f/b 2 thru 6 , f/b A(T), 5102-LHE, f/b 2 thru 6, f/b Y(T), 5102-LHE, f/b 2, f/b 1 thru 12 , f/b Y(T), 5240-LHE f/b 2 , f/b 1 thru 12, f/b A2 or AW, 5240-LHE f/b 2 thru 6, f/b A2 or AW

Connector, Model(s) 5240-LHE followed by 2, followed by 1 thru 12, followed by A(T)

Connector, Model(s) 5240-LHE, f/b 2 thru 6 , f/b A(T), 5240-LHE, f/b 2 thru 6, f/b Y(T), 5240-LHE, f/b 2, f/b 1 thru 12 , f/b Y(T), 5500-LHE f/b 2 , f/b 1 thru 12, f/b A2 or AW, 5500-LHE f/b 2 thru 6, f/b A2 or AW

Connector, Model(s) 5500-LHE followed by 2, followed by 1 thru 12, followed by A(T)

Connector, Model(s) 5500-LHE, f/b 2 thru 6 , f/b A(T), 5500-LHE, f/b 2 thru 6, f/b Y(T), 5500-LHE, f/b 2, f/b 1 thru 12 , f/b Y(T), 5557 followed by 2 thru 6, followed by A(T), 5557 followed by 2 thru 6, followed by A2 or AW, 5557 followed by 2 thru 6, followed by Y(T)

Connector, Model(s) 5557 followed by 2, followed by 1 thru 12, followed by A(T).

Connector, Model(s) 5557 followed by 2, followed by 1 thru 12, followed by A2 or AW

Connector, Model(s) 5557 followed by 2, followed by 1 thru 12, followed by Y(T)

Connector, Model(s) 5559-LHE f/b 2 , f/b 1 thru 12, f/b A2 or AW, 5559-LHE f/b 2 thru 6, f/b A2 or AW

Connector, Model(s) 5559-LHE followed by 2, followed by 1 thru 12, followed by A(T).

Connector, Model(s) 5559-LHE, f/b 2 thru 6 , f/b A(T), 5559-LHE, f/b 2 thru 6, f/b Y(T), 5559-LHE, f/b 2, f/b 1 thru 12 , f/b Y(T), 5566-LHE f/b 2 , f/b 1 thru 12, f/b A2 or AW, 5566-LHE f/b 2 thru 6, f/b A2 or AW

Connector, Model(s) 5566-LHE followed by 2, followed by 1 thru 12, followed by A(T)

Connector, Model(s) 5566-LHE, f/b 2 thru 6 , f/b A(T), 5566-LHE, f/b 2 thru 6, f/b Y(T), 5566-LHE, f/b 2, f/b 1 thru 12 , f/b Y(T), 5569-LHE f/b 2 , f/b 1 thru 12, f/b A2 or AW, 5569-LHE f/b 2 thru 6, f/b A2 or AW

Connector, Model(s) 5569-LHE followed by 2, followed by 1 thru 12, followed by A(T)

Connector, Model(s) 5569-LHE, f/b 2 thru 6 , f/b A(T), 5569-LHE, f/b 2 thru 6, f/b Y(T), 5569-LHE, f/b 2, f/b 1 thru 12 , f/b Y(T), 5600-LHE f/b 2 , f/b 1 thru 12, f/b A2 or AW, 5600-LHE f/b 2 thru 6, f/b A2 or AW

Connector, Model(s) 5600-LHE followed by 2, followed by 1 thru 12, followed by A(T)

Connector, Model(s) 5600-LHE, f/b 2 thru 6 , f/b A(T), 5600-LHE, f/b 2 thru 6, f/b Y(T), 5600-LHE, f/b 2, f/b 1 thru 12 , f/b Y(T), 63080-LHE f/b 2 , f/b 1 thru 12, f/b A2 or AW, 63080-LHE f/b 2 thru 6, f/b A2 or AW

Connector, Model(s) 63080-LHE followed by 2, followed by 1 thru 12, followed by A(T)

Connector, Model(s) 63080-LHE, f/b 2 thru 6 , f/b A(T), 63080-LHE, f/b 2 thru 6, f/b Y(T), 63080-LHE, f/b 2, f/b 1 thru 12 , f/b Y (T), B2502 followed by 2 thru 16, followed by Y(T), BH3.5-2A(T), BH3.5-2Y(T), MX3.0 followed by 2 thru 12, followed by A(T), MX3.0 followed by 2 thru 12, followed by A2 or AW, MX3.0 followed by 2 thru 12, followed by Y(T)

Connector, Model(s) MX3.0 followed by 2, followed by 1 thru 12, followed by A(T).

Connector, Model(s) MX3.0 followed by 2, followed by 1 thru 12, followed by A2 or AW

Connector, Model(s) MX3.0 followed by 2, followed by 1 thru 12, followed by Y(T)

Connector, Model(s) PA-LHE f/b 2, f/b 1 thru 12, f/b Y(T), PA-LHE followed by 2 thru 12, followed by A(T)

Connector, Model(s) PA-LHE followed by 2 thru 12, followed by A2 or AW

Connector, Model(s) PA-LHE followed by 2 thru 12, followed by Y(T)

Connector, Model(s) PA-LHE followed by 2, followed by 1 thru 12, followed by A(T)

Connector, Model(s) PA-LHE followed by 2, followed by 1 thru 12, followed by A2 or AW

Connector, Model(s) PH, PHB, XHB, JC25, SCN followed by -2 thru -20, followed by Y(T), A, AW or AWD

Connector, Model(s) PHB followed by 2 thru 16, followed by Y(T). followed by 2 thru 16, followed by AWD, A, AW

Connector, Model(s) Series 1.25, 1254, 1255 followed by -2 thru -25, followed by Y(T), A or AW

Connector, Model(s) Series 5264 followed by -2 thru -16, followed by Y(T), A or AWD

Connector, Model(s) SM followed by -2 thru -18, followed by Y(T) or A(T)

Connector, Model(s) VH, 3.96 followed by -2 thru -16, followed by Y(T), A, AW or AWG

Connector, Model(s) XA-LHE f/b 2, f/b 1 thru 12, f/b Y(T), XA-LHE followed by 2 thru 12, followed by A(T)

Connector, Model(s) XA-LHE followed by 2 thru 12, followed by A2 or AW

Connector, Model(s) XA-LHE followed by 2 thru 12, followed by Y(T)

Connector, Model(s) XA-LHE followed by 2, followed by 1 thru 12, followed by A(T)

Connector, Model(s) XA-LHE followed by 2, followed by 1 thru 12, followed by A2 or AW

Connector, Model(s) XH followed by -2 thru -20, followed by Y(T), A, AW, AWGD, AWD or AWGDJ

Connector, Model(s) ZH followed by 2 thru 16, followed by AWD or A, ZH followed by 2 thru 16, followed by Y(T).

Model(s) 1.25, followed by -2 thru -16, followed by AB or AWB

Model(s) 51146 or FI-S, followed by -2 thru -16, followed by AB or AWB

Model(s) A5001, followed by -2 thru -7, followed by Y, Y(T), AD or AWD

Model(s) B2501-LHE, A2004-LHE, A4203-LHE, PHR-LHE, PHD-LHE, CH2.5-LHE, DF11-LHE, PHSD-LHE, A5001-LHE, 35155-LHE, 35156-LHE, 5195-LHE, 5196-LHE, followed by 2 thru 16, followed by Y(T)

Model(s) BHS-LHE, SMH250-LHE, SMH200-LHE, L6.2-LHE, 1806-LHE, 2060-LHE, 2541-LHE, JC15-LHE, XHD-LHE, followed by -2, followed by A(T), or Y(T)

Model(s) JWPF-LHE, B2541-LHE, NV-LHE, DV-LHE, SGN-LHE, SJN-LHE, SDN-LHE, SIN-LHE, 35150-LHE, 35151-LHE, 35180-LHE, 35182-LHE, 35524-LHE, 35965-LHE, RCY-LHE, LC-LHE, VR-LHE, SHJ-LHE, SHL-LHE, DF19-LHE, ACH-LHE, DF13-LHE, IL-Z-LHE, 51146-LHE, SATA-LHE, XSR-LHE, SUR-LHE, SUH-LHE, ZE-LHE, ZND-LHE, ZPD-LHE, A1502-LHE, SFH-LHE,51004-LHE, PUD-LHE, A20010-LHE, 35507-LHE, DF3-LHE, PND-LHE, RE-LHE,RA-LHE, RF-LHE or A3963, followed by -2 thru -15, followed by Y(T), YB(T) or YC(T), A, A-K, AW, AW-K, AD, AD-K, AWGD, AWGD-K, AQ, AQ-K, AWQ, AWQ-K, AD(BH) or AD(BH)-K.

Model(s) PH, followed by -2 thru -16, followed by AB or AWB

Model(s) PHB, SZN-LHE, SAN-LHE, JC20-LHE, EH-LHE, EI-LHE, EL-LHE, S-EL-LHE, followed by 2 thru 16, followed by AWD, A, AW

Model(s) PHB, SZN-LHE, SAN-LHE, JC20-LHE, EH-LHE, EI-LHE, EL-LHE, S-EL-LHE, followed by 2 thru 16, followed by Y(T)

Model(s) PHB, XH, XHB or XHBD, followed by -2 thru -16, followed by AB or AWB.

Model(s) RAST 5-LHE TAB HEADER ASSY , TH, Vertical, Cat. Nos. 1969738-LHE,1969740-LHE, 1971845-LHE, 1971846-LHE, 1971895-LHE, 1971896-LHE, 1971946-LHE thru 1971949-LHE, 1971954-LHE thru 1971957-LHE, 2232008-LHE thru 2232011-LHE, 2232000-LHE thru 2232003-LHE, 2232016-LHE thru 2232019-LHE, 1971962-LHE thru 1971965-LHE, 2232024-LHE thru 2232027-LHE, 2232289-LHE thru 2232292-LHE, 2232043-LHE thru 2232074-LHE, 2232298-LHE thru 2232301-LHE, 2232511-LHE, 2232532-LHE, 2232557-LHE, 2232559-LHE, 2232560-LHE, 2232562-LHE, 2232563-LHE, 2232565-LHE, 2232566-LHE, 2232568-LHE, 2232569-LHE, 2232571-LHE, 2232572-LHE, 2232574-LHE, 2232575-LHE, 2232577-LHE, 2232578-LHE, 2232580-LHE, 2232581-LHE, 2232583-LHE, 2232584-LHE, 2232586-LHE, 2232587-LHE, 2232589-LHE, 2232590-LHE, 2232592-LHE, 2232593-LHE, 2232595-LHE, 2232596-LHE, 2232598-LHE, 2232599-LHE, 2232601-LHE, 2232602-LHE, 2232604-LHE, 2232605-LHE, 2232607-LHE, 2232608-LHE, 2232611-LHE thru 2232682-LHE, 2292457-LHE, 2292458-LHE, may incorporate prefix and/or suffix number.), followed by -2 thru -7, followed by Y, Y(T), AD or AWD.

Model(s) SY, followed by -2, followed by Y, Y(T), A or A(T)

Model(s) SYP, SYR, BH4.0-LHE, A10001-LHE, A7501-LHE, A8001-LHE, C2541-LHE, C2542-LHE, D250R-LHE, D280K-LHE, D300R-LHE, D350R-LHE, D400B-LHE, D430R-LHE, D470G-LHE, D480J-LHE, D480K-LHE, D480N-LHE, D480Q-LHE, D520H-LHE, D520K-LHE, D520Q-LHE, D620G-LHE, D630J-LHE, D630N-LHE, D630Q-LHE, D700G-LHE, F001-LHE, F002-LHE, HIF3-LHE, MC100-LHE, MC100-LHE, ME020-LHE, ME010-LHE, F2541-LHE, D2301-LHE, 1719057-LHE, 1719059-1-LHE, P0011-LHE, P0012-LHE, P0013-LHE, C6001-LHE, D2201-LHE, D2202-LHE or P0001-LHE, followed by -2, followed by Y, Y(T), A or A(T).

Model(s) VL-LHE , YL-LHE, SL-LHE, FL-LHE, YHD200-LHE, HA-LHE, LGC-LHE, JR-LHE, SP-LHE, 5025-LHE, followed by 2, followed by 1 thru 12, followed by A(T), Y(T), A2 or AW

Model(s) VL-LHE, YL-LHE, SL-LHE, FL-LHE, YHD200-LHE, HA-LHE, LGC-LHE, JR-LHE, SP-LHE, 5025-LHE, followed by 2 thru 12, followed by A(T), Y(T), A2 or AW

Model(s) XHD, XHE or XHQ, followed by -2 thru -15, followed by Y(T), YB(T) or YC(T), A, A-K, AW, AW-K, AD, AD-K, AWGD, AWGD-K, AQ, AQ-K, AWQ, AWQ-K, AD(BH) or AD(BH)-K.

Model(s) ZH, followed by -2 thru -16, followed by AB or AWB

Model(s) ZHR-LHE, SH-LHE, GH-LHE, NH-LHE, C1251-LHE, DF14-LHE, 5501-LHE, 75416-LHE, 543-LHE, followed by 2 thru 16, followed by AWD or A

Model(s) ZHR-LHE, SH-LHE, GH-LHE, NH-LHE, C1251-LHE, DF14-LHE, 5501-LHE, 75416-LHE, 543-LHE, followed by 2 thru 16, followed by Y(T)

Marking: Company name or trademark LHE , model designation and the Recognized Component Mark, on the device or carton.

Last Updated on 2020-02-20

并不是所有出现在本数据库中的公司名称和产品都满足了UL 跟踪检验服务的要求。只有带有 UL 标志的产品，才应该被视为经过UL认证，并满足UL 跟踪检验服务的要求。注意查看产品上的标志。

UL 允许在线认证目录中所含材料的复制遵循以下条件：1.指南信息、装配、构造、设计、系统和/或认证（文件）必须在不篡改任何数据（或图纸）的情况下完整且无误导性地呈现。2.“经 UL 允许从在线认证目录转载”声明必须出现在所摘取材料的邻近位置。此外，转载材料必须包含以下格式的版权声明： "© 2020 UL LLC"

Verification No.: CLZJ22071339847R

VERIFICATION OF LVD COMPLIANCE

Applicant:	ZHEJIANG LIANHE ELECTRONICS CO.,LTD
Address of applicant:	Hongqi Road, electronic information industrial park, Yueqing Bay port area, Yueqing City, Zhejiang Province
Manufacturer:	ZHEJIANG LIANHE ELECTRONICS CO.,LTD Hongqi Road, electronic information industrial park, Yueqing Bay port area, Yueqing City, Zhejiang Province
Product Description:	connector tenminal
Model No.:	See annex

Sufficient samples of the product have been tested and found to be in conformity with

Test Standard:	EN 60320-1:2015+AC:2016

As shown in the

Test Report Number(s):	TLZJ22071339847R
Date of issue:	July 15, 2022
Date of expiry:	July 14, 2027

Conclusion

This Verification of LVD Compliance has been granted to the applicant based on the results of the TCF, performed by Global Testing Services Co., Ltd. on the sample of the above-mentioned product in accordance with the provisions of the relevant specific standards and the Directive 2014/35/EU. The CE mark as shown below can be used, under the responsibility of the manufacturer, after completion of an EU Declaration of Conformity and compliance with all relevant EU Directives. The affixing of the CE marking presumes in addition that the conditions in annexes III and IV of the Directive are fulfilled.

Approved by: Hermann Weiher

For and on behalf of
Global Testing Services Co., Ltd

GLOBAL TESTING SERVICES CO.,LTD. GTS CERTIFICATION

Global Testing Services Co., Ltd
E-mail:info@gts-lab.com http://www.gts-lab.com
Floor 2nd, Building D-1, No. 128, Shenfu Road, Minhang District, Shanghai, China.

Copyright of this certificate is owned by Global Testing Services Co., Ltd and may not be reproduced other than in full and with the prior approval of the General Manager.

Verification No.: CLZJ22071339847

VERIFICATION OF LVD COMPLIANCE

Annex

A1004, A1005, A1006, A1258, A1259, A1504, A1505, A1506, A2008, A2009, A20010, A20011, A20012, A20013, A25013, A25014, A25015, A25016, A2546, A2547, A3003, A3004, A3005, A3302, A3303, A3304, A3965, A3966, A4204, A4205, A5005, A5006, A508, A5084, A6501, A6502, A6503, B1253,B1254, B1255, B150, B1504, B1505, B2003, B2004, B2005, B2503, B2504, B2505, B2543, B2544, B2545, B76202, B11001, C01583, C01584, C1252, C1253, C1502, C1503, C2003, C2004, C2005, C2006, C2507,C2508, C2509, C25010, C25011, C25012, C25013, C25014, C2541, C2542, C2543, C3007, C3008 ,C3009, C3503, C3504, C3505, C3683, C3684, C368, C3961, C3962, C3963, C4003, C4205, C4206, C4207, C4505, C4506, C4507, C5003, C5004, C5005, C6203, C6204, C6205, C6353, C6354, C6355, C4004, C4005, C4143, C4144, C4145, D6002, F2541, P0001, P0002, P0003, P0004, P0005, P0006, P0007, P0008, P0009, P0010, P0011, P0012, P0013, P0014, P0015, P0016, P0017, P0018, P0019, P0020, 2060, CS28H, 1719057, 1719059, PP0311401, 33EMMT26FBK, 3DLG06FW, 3FW06FBM, PP0426613, PP0426202, 20T1001001, PP043531T, JWPF

Approved by: Hermann Weiher

For and on behalf of
Global Testing Services Co., Ltd

Global Testing Services Co., Ltd
E-mail:info@gts-lab.com http://www.gts-lab.com
Floor 2nd, Building D-1, No. 128, Shenfu Road, Minhang District, Shanghai, China.

Copyright of this certificate is owned by Global Testing Services Co., Ltd and may not be reproduced other than in full and with the prior approval of the General Manager.

产品认证证书

证书编号：CQC17134174484

发证日期：2025 年 08 月 29 日
有效期至：2030 年 08 月 28 日

委托人名称及注册地址	浙江联和电子有限公司 浙江省乐清市乐清湾港区乐商创业园
制造商名称及注册地址	浙江联和电子有限公司 浙江省乐清市乐清湾港区乐商创业园
生产企业名称及生产地址	浙江联和电子有限公司 乐清市乐清湾港区电子信息产业园红旗路 8 号
产品名称和系列、规格、型号	连接器聚酰胺 66(PA66) 型号见附件，材料名称：聚酰胺（PA66），材料牌号：A3RV0，全色， 球压:200℃, 灼热丝可燃性指数(GWFI):960/0.5（tI、tE 值见附件），灼热丝起燃温度(GWIT):960/0.5（tI、tE 值见附件），燃烧等级:V-0@0.3mm,CTI600, 红外光谱,差示扫描量热和热重分析见报告 00601-2025134003251
产品标准和技术要求	GB/T 19466.1-2004;GB/T 19466.2-2004;GB/T 19466.3-2004 ;GB/T 33047.1-2016;GB/T 4207-2022;GB/T 5169.12-2024;GB/T 5169.13-2024;GB/T 5169.16-2017;GB/T 5169.21-2017;GB/T 6040-2019
认证模式	产品检验+获证后监督

上述产品符合 CQC13-036047-2009 认证规则的要求，特发此证。
本证书为变更证书，证书首次颁发日期：2017 年 07 月 27 日
证书有效期内本证书的有效性依据发证机构的定期监督获得保持。

可通过扫描下方二维码或登录国家认监委网站（www.cnca.gov.cn）查验证书信息

签发：谢肇煦

中国质量认证中心
CHINA QUALITY CERTIFICATION CENTRE

中国质量认证中心有限公司
1101061026946 6

中国质量认证中心有限公司
中国·北京·南四环西路188号9区 100070

电话：+86 10 83886666
http://www.cqc.com.cn

CERTIFICATE OF PRODUCT CERTIFICATION

CERTIFICATE NO.: CQC17134174484

Valid from: Aug.29,2025
Valid until: Aug.28,2030

NAME AND REGISTERED ADDRESS OF THE APPLICANT	Zhejiang Lianhe Electronics Co., Ltd Yueqing City, Zhejiang Province, Yueqing Bay Port District Leshang Business Park
NAME AND REGISTERED ADDRESS OF THE MANUFACTURER	Zhejiang Lianhe Electronics Co., Ltd Yueqing City, Zhejiang Province, Yueqing Bay Port District Leshang Business Park
NAME AND LOCATION OF THE FACTORY	Zhejiang Lianhe Electronics Co., Ltd Yueqing City, Zhejiang Province, Yueqing Bay Port District Leshang Business Park
PRODUCT NAME, MODEL AND SPECIFICATION	Connector polyamide 66 (PA66) Model see accessories, material name: polyamide (PA66), material grade: A3RV0, panchromatic, ball pressure: 200°C, Glow wire flammability index (GWFI): 960/0.5（tI、tE see Annex）, , Glow wire ignition temperature (GWIT): 960/0.5(tI、tE See Annex), , Combustion grade: V-0@0.3mm, CTI600, infrared spectroscopy, differential scanning calorimetry and thermogravimetric analysis see report 00601-2025134003251
THE STANDARDS AND TECHNICAL REQUIREMENTS FOR THE PRODUCTS	GB/T 19466.1-2004;GB/T 19466.2-2004;GB/T 19466.3-2004 ;GB/T 33047.1-2016;GB/T 4207-2022;GB/T 5169.12-2024;GB/T 5169.13-2024;GB/T 5169.16-2017;GB/T 5169.21-2017;GB/T 6040-2019
TYPE OF CERTIFICATION SCHEMES	Testing of Product+Follow up Annual Testing

This is to certify that the above mentioned product(s) complies with the requirements of certification rules of CQC13-036047-2009.

Date of original issued: Jul.27,2017

The validity of the certificate is subject to positive result of the regular follow up inspection by issuing certification body until the expiry date.

The certificate information is available through the QR code below or CNCA's website: www.cnca.gov.cn

SIGNATURE: 谢肇煦

中国质量认证中心
CHINA QUALITY CERTIFICATION CENTRE

中国质量认证中心有限公司
1101061026946 6

CHINA QUALITY CERTIFICATION CENTRE CO., LTD.
Section 9, No. 188, Nansihuan Xilu, Beijing 100070 P. R. China

Tel: +86 10 83886666
http://www.cqc.com.cn

IQNET

Building trust together.

Certificate

CQC has issued an IQNET recognized certificate that the organization:

Zhejiang Lianhe Electronics Co., Ltd.

Registered Address:Yueshang Pioneer Park, Yueqing Bay Port Area,Yueqing City, Wenzhou City, Zhejiang Province, China
Operation Address1: No 8, Innovation Road, Yueshang Pioneer Park, Yueqing Bay Port Area, Yueqing City, Wenzhou City, Zhejiang Province, China
Operation Address2: No 8, Hongqi Road, Electronic Information Industrial Park,Yueqing Bay Port Area,Yueqing City, Wenzhou City, Zhejiang Province, China

has implemented and maintains an

Environmental Management System

for the following scope:

Design and Production of Electronics Connector (Including Wiring Block, Binding Post and Terminal Block) and Related Management Activities

which fulfils the requirements of the following standard:

ISO 14001:2015

Issued on: December 4, 2025
First issued on: February 12, 2020
Expires on: February 11, 2029

Registration Number: CN00125E34334R2M/3302

Alex Stoichitoiu
President of IQNET

Xie Zhaoxu
President of CQC

This attestation is directly linked to the IQNET Member's original certificate and shall not be used as a stand-alone document.

IQNET Members*:
AENOR Spain **AFNOR Certification** France **APCER** Portugal **CCC** Cyprus **CISQ** Italy **CQC** China **CQM** China **CQS** Czech Republic **Cro Cert** Croatia **DQS Holding GmbH** Germany **EAGLE Certification Group** USA **FCAV** Brazil **FONDONORMA** Venezuela **ICONTEC** Colombia **ICS** Bosnia and Herzegovina **INTECO** Costa Rica **IRAM** Argentina **JQA** Japan **KFQ** Korea **LSQA** Uruguay **MIRTEC** Greece **MSZT** Hungary **Nemko AS** Norway **NSAI** Ireland **NYCE** México **PCBC** Poland **Quality Austria** Austria **SII** Israel **SIQ** Slovenia **SIRIM QAS International** Malaysia **SQS** Switzerland **SRAC** Romania **TSE** Türkiye **YUQS** Serbia

* The list of IQNET Members is valid at the time of issue of this certificate. Updated information is available under www.iqnet-certification.com

230920340938

中国认可
国际互认
检测
TESTING
CNAS L0599

检测报告

编号：SHAEC26008284106　　**日期：**2026 年 04 月 08 日　　第 1 页，共 10 页

客户名称：　浙江联和电子有限公司

客户地址：　浙江省乐清市乐清湾港区乐商创业园
浙江省乐清市乐清湾港区电子信息产业园红旗路 8 号

样品名称：　PA66 连接器

型号：　XHD-5A

客户参考信息：　见附件

以上样品及信息由客户提供。

SGS 工作编号：　TIC10202603311150295PAY

样品接收时间：　2026 年 03 月 31 日

检测周期：　2026 年 03 月 31 日 ~ 2026 年 04 月 08 日

检测要求：　根据客户要求检测。

检测方法：　见后续页。

检测结果：　见后续页。

检测要求	结论
欧盟 RoHS 指令 2011/65/EU 附录 II 的修正指令(EU) 2015/863-铅、汞、镉、六价铬、多溴联苯 (PBB)、多溴二苯醚 (PBDE)、邻苯二甲酸二(2-乙基己基)酯 (DEHP)、邻苯二甲酸丁苄酯 (BBP)、邻苯二甲酸二丁酯 (DBP)和邻苯二甲酸二异丁酯 (DIBP)	符合

通标标准技术服务（上海）有限公司
授权签名

胡敏

Dora Hu 胡敏
批准签署人

Scan to see the report

F65E8B11

Unless otherwise agreed in writing, this document is issued by the Company subject to its General Conditions of Service printed overleaf, available on request or accessible at https://www.sgs.com/en/Terms-and-Conditions. Attention is drawn to the limitation of liability, indemnification and jurisdiction issues defined therein. Any holder of this document is advised that information contained hereon reflects the Company's findings at the time of its intervention only and within the limits of Client's instructions, if any. The Company's sole responsibility is to its Client and this document does not exonerate parties to a transaction from exercising all their rights and obligations under the transaction documents. This document cannot be reproduced except in full, without prior written approval of the Company. Any unauthorized alteration, forgery or falsification of the content or appearance of this document is unlawful and offenders may be prosecuted to the fullest extent of the law. Unless otherwise stated the results shown in this test report refer only to the sample(s) tested.
Attention: To check the authenticity of testing /inspection report & certificate, please contact us at telephone: (86-755) 8307 1443, or email: CN.Doccheck@sgs.com

3rd Building,No.889 Yishan Road Xuhui District,Shanghai China 200233
中国 · 上海 · 徐汇区宜山路889号3号楼 邮编: 200233
t E&E (86-21) 61402553　www.sgsgroup.com.cn
t HL (86-21) 61402594　sgs.china@sgs.com

Member of the SGS Group (SGS SA)

SGS

检测报告 **编号：**SHAEC26008284106 **日期：**2026 年 04 月 08 日 第 2 页，共 10 页

检测结果：

检测部件外观描述:

样品序号	样品编号	SGS 样品 ID	样品描述
SN1	A1	SHA26-0082841-0001.C001	白色固体

备注：

(1) 1 mg/kg = 1 ppm = 0.0001%
(2) MDL= 方法检出限
(3) ND = 未检出(< MDL)
(4) "-" = 未规定

欧盟 RoHS 指令 2011/65/EU 附录 II 的修正指令(EU) 2015/863-铅、汞、镉、六价铬、多溴联苯 (PBB)、多溴二苯醚 (PBDE)、邻苯二甲酸二(2-乙基己基)酯 (DEHP)、邻苯二甲酸丁苄酯 (BBP)、邻苯二甲酸二丁酯 (DBP)和邻苯二甲酸二异丁酯 (DIBP)

检测方法： 参考 IEC 62321-4:2013+AMD1:2017，IEC 62321-5:2013，IEC 62321-7-2:2017 和 IEC 62321-12:2023，采用 ICP-OES/AAS，UV-Vis 和 GC-MS 进行分析。

检测项目	限值	单位	MDL	A1
铅 (Pb)	1000	mg/kg	2	ND
汞 (Hg)	1000	mg/kg	2	ND
镉 (Cd)	100	mg/kg	2	ND
六价铬 (Cr(VI))	1000	mg/kg	8	ND
多溴联苯之和 (PBB)	1000	mg/kg	-	ND
一溴联苯 (MonoBB)	-	mg/kg	25	ND
二溴联苯 (DiBB)	-	mg/kg	25	ND
三溴联苯 (TriBB)	-	mg/kg	25	ND
四溴联苯 (TetraBB)	-	mg/kg	25	ND
五溴联苯 (PentaBB)	-	mg/kg	25	ND
六溴联苯 (HexaBB)	-	mg/kg	25	ND
七溴联苯 (HeptaBB)	-	mg/kg	25	ND
八溴联苯 (OctaBB)	-	mg/kg	25	ND
九溴联苯 (NonaBB)	-	mg/kg	25	ND
十溴联苯 (DecaBB)	-	mg/kg	25	ND
多溴二苯醚之和 (PBDE)	1000	mg/kg	-	ND
一溴二苯醚 (MonoBDE)	-	mg/kg	25	ND
二溴二苯醚 (DiBDE)	-	mg/kg	25	ND
三溴二苯醚 (TriBDE)	-	mg/kg	25	ND
四溴二苯醚 (TetraBDE)	-	mg/kg	25	ND
五溴二苯醚 (PentaBDE)	-	mg/kg	25	ND
六溴二苯醚 (HexaBDE)	-	mg/kg	25	ND
七溴二苯醚 (HeptaBDE)	-	mg/kg	25	ND
八溴二苯醚 (OctaBDE)	-	mg/kg	25	ND

Unless otherwise agreed in writing, this document is issued by the Company subject to its General Conditions of Service printed overleaf, available on request or accessible at https://www.sgs.com/en/Terms-and-Conditions. Attention is drawn to the limitation of liability, indemnification and jurisdiction issues defined therein. Any holder of this document is advised that information contained hereon reflects the Company's findings at the time of its intervention only and within the limits of Client's instructions, if any. The Company's sole responsibility is to its Client and this document does not exonerate parties to a transaction from exercising all their rights and obligations under the transaction documents. This document cannot be reproduced except in full, without prior written approval of the Company. Any unauthorized alteration, forgery or falsification of the content or appearance of this document is unlawful and offenders may be prosecuted to the fullest extent of the law. Unless otherwise stated the results shown in this test report refer only to the sample(s) tested.
Attention: To check the authenticity of testing /inspection report & certificate, please contact us at telephone: (86-755) 8307 1443, or email: CN.Doccheck@sgs.com

3rd Building, No.889 Yishan Road Xuhui District, Shanghai China 200233
中国·上海·徐汇区宜山路889号3号楼 邮编: 200233
t E&E (86-21) 61402553 www.sgsgroup.com.cn
t HL (86-21) 61402594 sgs.china@sgs.com

Member of the SGS Group (SGS SA)

SGS

检测报告 **编号：**SHAEC26008284106 **日期：**2026 年 04 月 08 日 第 3 页，共 10 页

检测项目	限值	单位	MDL	A1
九溴二苯醚 (NonaBDE)	-	mg/kg	25	ND
十溴二苯醚 (DecaBDE)	-	mg/kg	25	ND
邻苯二甲酸二(2-乙基己基)酯 (DEHP)	1000	mg/kg	50	ND
邻苯二甲酸丁苄酯 (BBP)	1000	mg/kg	50	ND
邻苯二甲酸二丁酯 (DBP)	1000	mg/kg	50	ND
邻苯二甲酸二异丁酯 (DIBP)	1000	mg/kg	50	ND

备注：

(1) 最大允许极限值引用自 RoHS 指令(EU) 2015/863。

(2) IEC 62321 系列等同于 EN 62321 系列。

(3) 2021 年 7 月 22 号开始，DEHP， BBP， DBP 和 DIBP 的限制适用于医疗器械，包括体外医疗器械，监控仪表，包括工业监测和控制仪器。

除非另有说明，参照 ILAC-G8:09/2019，使用简单接受（*w*=0）的二元判定规则进行符合性判定。

除非另有说明，此报告结果仅对检测的样品负责。本报告未经本公司书面许可，不可部分复制。

Unless otherwise agreed in writing, this document is issued by the Company subject to its General Conditions of Service printed overleaf, available on request or accessible at https://www.sgs.com/en/Terms-and-Conditions. Attention is drawn to the limitation of liability, indemnification and jurisdiction issues defined therein. Any holder of this document is advised that information contained hereon reflects the Company's findings at the time of its intervention only and within the limits of Client's instructions, if any. The Company's sole responsibility is to its Client and this document does not exonerate parties to a transaction from exercising all their rights and obligations under the transaction documents. This document cannot be reproduced except in full, without prior written approval of the Company. Any unauthorized alteration, forgery or falsification of the content or appearance of this document is unlawful and offenders may be prosecuted to the fullest extent of the law. Unless otherwise stated the results shown in this test report refer only to the sample(s) tested.
Attention: To check the authenticity of testing /inspection report & certificate, please contact us at telephone: (86-755) 8307 1443, or email: CN.Doccheck@sgs.com

检验检测专用章 Inspection & Testing Services

3rd Building,No.889 Yishan Road Xuhui District,Shanghai China 200233
中国·上海·徐汇区宜山路889号3号楼 邮编: 200233
t E&E (86-21) 61402553 www.sgsgroup.com.cn
t HL (86-21) 61402594 sgs.china@sgs.com

Member of the SGS Group (SGS SA)

SGS

检测报告 **编号：**SHAEC26008284106 **日期：**2026 年 04 月 08 日 第 4 页，共 10 页

附件

元素检测流程图

样品中的 Pb/Cd/Hg 按照下述流程被完全消解。

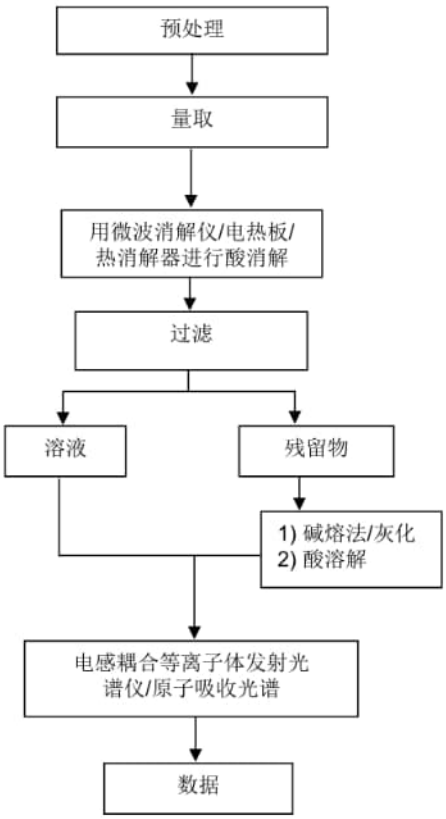

Unless otherwise agreed in writing, this document is issued by the Company subject to its General Conditions of Service printed overleaf, available on request or accessible at https://www.sgs.com/en/Terms-and-Conditions. Attention is drawn to the limitation of liability, indemnification and jurisdiction issues defined therein. Any holder of this document is advised that information contained hereon reflects the Company's findings at the time of its intervention only and within the limits of Client's instructions, if any. The Company's sole responsibility is to its Client and this document does not exonerate parties to a transaction from exercising all their rights and obligations under the transaction documents. This document cannot be reproduced except in full, without prior written approval of the Company. Any unauthorized alteration, forgery or falsification of the content or appearance of this document is unlawful and offenders may be prosecuted to the fullest extent of the law. Unless otherwise stated the results shown in this test report refer only to the sample(s) tested.
Attention: To check the authenticity of testing /inspection report & certificate, please contact us at telephone: (86-755) 8307 1443, or email: CN.Doccheck@sgs.com

3rd Building,No.889 Yishan Road Xuhui District,Shanghai China 200233
中国·上海·徐汇区宜山路889号3号楼 邮编: 200233
t E&E (86-21) 61402553 www.sgsgroup.com.cn
t HL (86-21) 61402594 sgs.china@sgs.com

Member of the SGS Group (SGS SA)

附件

六价铬检测流程图

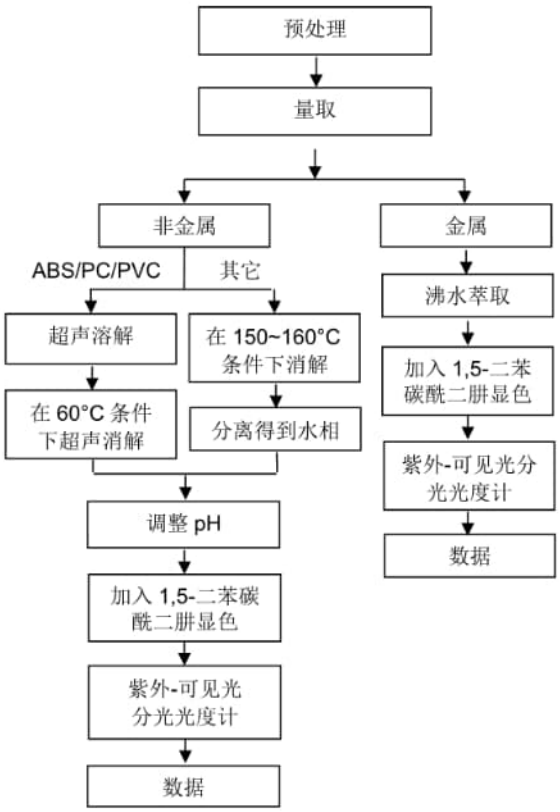

Unless otherwise agreed in writing, this document is issued by the Company subject to its General Conditions of Service printed overleaf, available on request or accessible at https://www.sgs.com/en/Terms-and-Conditions. Attention is drawn to the limitation of liability, indemnification and jurisdiction issues defined therein. Any holder of this document is advised that information contained hereon reflects the Company's findings at the time of its intervention only and within the limits of Client's instructions, if any. The Company's sole responsibility is to its Client and this document does not exonerate parties to a transaction from exercising all their rights and obligations under the transaction documents. This document cannot be reproduced except in full, without prior written approval of the Company. Any unauthorized alteration, forgery or falsification of the content or appearance of this document is unlawful and offenders may be prosecuted to the fullest extent of the law. Unless otherwise stated the results shown in this test report refer only to the sample(s) tested.
Attention: To check the authenticity of testing /inspection report & certificate, please contact us at telephone: (86-755) 8307 1443, or email: CN.Doccheck@sgs.com
3rd Building,No.889 Yishan Road Xuhui District,Shanghai China 200233
中国·上海·徐汇区宜山路889号3号楼 邮编: 200233
t E&E (86-21) 61402553 www.sgsgroup.com.cn
t HL (86-21) 61402594 sgs.china@sgs.com
Member of the SGS Group (SGS SA)

附件

PBB(s)/PBDE(s)/Phthalates 检测流程图

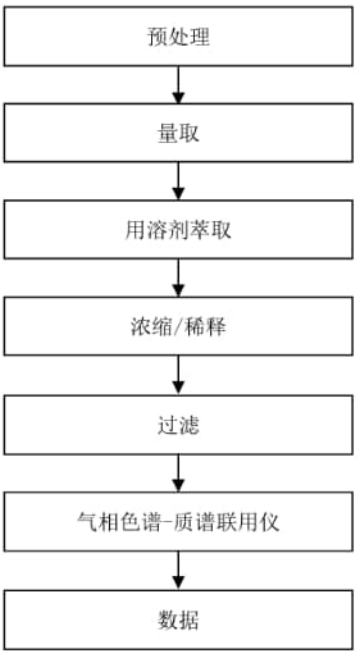

Unless otherwise agreed in writing, this document is issued by the Company subject to its General Conditions of Service printed overleaf, available on request or accessible at https://www.sgs.com/en/Terms-and-Conditions. Attention is drawn to the limitation of liability, indemnification and jurisdiction issues defined therein. Any holder of this document is advised that information contained hereon reflects the Company's findings at the time of its intervention only and within the limits of Client's instructions, if any. The Company's sole responsibility is to its Client and this document does not exonerate parties to a transaction from exercising all their rights and obligations under the transaction documents. This document cannot be reproduced except in full, without prior written approval of the Company. Any unauthorized alteration, forgery or falsification of the content or appearance of this document is unlawful and offenders may be prosecuted to the fullest extent of the law. Unless otherwise stated the results shown in this test report refer only to the sample(s) tested.
Attention: To check the authenticity of testing /inspection report & certificate, please contact us at telephone: (86-755) 8307 1443, or email: CN.Doccheck@sgs.com
3rd Building,No.889 Yishan Road Xuhui District,Shanghai China 200233
中国·上海·徐汇区宜山路889号3号楼 邮编: 200233
t E&E (86-21) 61402553 www.sgsgroup.com.cn
t HL (86-21) 61402594 sgs.china@sgs.com
Member of the SGS Group (SGS SA)

SGS

检测报告 **编号：**SHAEC26008284106 **日期：**2026 年 04 月 08 日 第 7 页，共 10 页

附件：

1.0，SH，SHD，1.25，51021，DF14，DF13，GH，ZH，PH，PHB，PA，PHSD，DF11，C1251，51047，51146，FI-S，PHD，YHD200，PA，SMP，SMW，SMH，SMH200，SMH200-H，YH200，20039WR，杜邦 2.0，杜邦 2.0 排针/排母，杜邦 2.54 排针/排母，XH/TJC3，XA，HA，XHB，XHD，XHE，EH，EI，5263，5264，5267，5268，SZN，SAN，SCN，SCND，SCNB, JC15，JC20，JC25，5102，5240，SMH250，SMP250，SMW250，25048HS，25045HP，SM，TJC8, 杜邦 2.54，TJC8A，杜邦带锁，TJC8B，TJC8H，5051，2510，美尚美，43640，43645，43020，43025，5500，5600，VH，VHRR，YH396，VHR，35156，2139，3.96，90331，5195，5196，39612，FL，5557，5559，5566，5569，SL，RV42，EL，YL，8981，5058，5.08，L6.2，VL，VLP/VLR，TJC2，TJC2A，TJC2B，TJC4，TJC1，1806，MX3.0，1.58，51005，51006，BH3.5，BH4.0，63080，51004，TJC15，A4203，CL014，OTP，MKH，SMF，Cy-X201，35108，35150，35151，35224，35180，35965，42021，42022，42002，35955，SA，SCS，35189，35196，CH10，CH2.5，543，SLP，SLR，YHL500，YWL500，FFC，FPC，20030，250，LGC，S11，YH025，35155，25415，5197，5198，110，2.8，6.3，SCS

NH，XHQ，42474，42475，QH，NV，50300，50301，5025，3191，5199，STV5，YHL500，YWL500，F001，F002，D440，D600，D620，D700，D220，D230，D250，D480，D520，D280，D630，D430，D400，D450，U-T，F1001-T，SIN-T，774，773，778，294，TU-JTK(SV)，TU(SNB)，TO-JTK(RV)，MDD，FDD，TG-JT，IDC，AUTO，CONNECTOR，DJ70，DT04，DT06，UY/K1，UY2/K2，UR/K3，UR2，UB/K4，UB2A，UG/K5，U1R/K8，U1B/K9，HJKT10，UDW2，314，A5001，A5002，MC100，FPC2.54，SGN，PHR，ZHR，ZHB，205，5.2，C1801，C1802，2060，A5003，ME020，ME010，FPC/FFC，B2541，1971845，1971846，2232043，2232044，2232511，1971895，1971896，JWPF，SY，Molex1.5，ME0100，RAST，A5004，DV，SJN，SDN，35182，35524，RCY，LC，VR，SHJ，SHL，DF19，ACH，IL-Z，SATA，XSR，SUR，SUH，ZE，ZND，ZPD，SFH，PUD，AMP2.0，35507，DF3，PND，RE，RA，RF，SYP/SYR，HIF3，MC100/ME020/ME010，F2541，VHB，VHC，VHD

SHB1.0, NHB1.0, FIS, VHE, 35313, 30PIN, PR9-409, PR5-70-1, PR5-24, 5240B, 5500B, 5600B,13006,13007, 3DLG06FW, 1719057, 1719058, 1719059, CS28H, 9102501, 9103101, 9111001, PP0311401, 33EMMT26FBK, 3CN2BH02, 3FW06FBM, PP0426613, PP0426202, GIC3.3, 1376421-1, XADR, XADRR, 179846, 179849, XHR, 50235, PAD, PNI, SDL2.5, PS-250-2A-15, 4.8, 62306, H9002, DC4235, 62308, 62420-1, B35E0, 63658-1, 1060-16-0122, RH0409000142, RH011810030061, RH040499000142, RH011810030090, 299900421692, 33146412, 1.25 插板, SPS-01T-110, 282104-1, 282105-1, 282110-1, 282109-1, 21T1000501, 20T1001001, PP043531T, XNIRP, XL, 1123343-1, DF16, 1473413-1, 12147302, MG641234-5, PHBS,0.8, Molex1.2, 35746, 35748, APM2.54

1969738, 1969740, 1971845, 1971846, 1971895, 1971896, 1971946 thru 1971949, 1971954 thru 1971957, 2232008 thru 2232011, 2232000 thru 2232003, 2232016 thru 2232019, 1971962 thru 1971965, 2232024 thru 2232027, 2232289 thru 2232292, 2232043 thru 2232074, 2232298 thru 2232301, 2232511, 2232532, 2232557, 2232559, 2232560, 2232562, 2232563, 2232565, 2232566, 2232568, 2232569, 2232571, 2232572, 2232574, 2232575, 2232577, 2232578, 2232580, 2232581, 2232583, 2232584, 2232586, 2232587, 2232589, 2232590, 2232592, 2232593, 2232595, 2232596, 2232598, 2232599, 2232601, 2232602, 2232604, 2232605, 2232607, 2232608, 2232611 thru 2232682, 2292457, 2292458, 1064,2064,3064,1080,2080,3080,1100,2100,3100,1120, 2120,3120,1150,2150,3150, 1180,2180,3180,1230,2230, 3230,1250,2250,3250,1280,2280,3280,1300,2300,3300, 1480,2480,3480, 1630,2630,3630,1780,2780,3780,1950, 2950,3950,1010,2010,3010,1013,2013,3013,1015,2015, 3015, 1016,2016,3016,1025,2025,3025,1035,2035,3035, 1045,2045,3045,1058,2058,3058,1999,2999,3999, 401,402,403,503,TPA,BX,CPA, 404, 501, 502,0010713201
A1001 A1002 A1003 A1004 A1005 A1006 A1007 A1008 A1009

Unless otherwise agreed in writing, this document is issued by the Company subject to its General Conditions of Service printed overleaf, available on request or accessible at https://www.sgs.com/en/Terms-and-Conditions. Attention is drawn to the limitation of liability, indemnification and jurisdiction issues defined therein. Any holder of this document is advised that information contained hereon reflects the Company's findings at the time of its intervention only and within the limits of Client's instructions, if any. The Company's sole responsibility is to its Client and this document does not exonerate parties to a transaction from exercising all their rights and obligations under the transaction documents. This document cannot be reproduced except in full, without prior written approval of the Company. Any unauthorized alteration, forgery or falsification of the content or appearance of this document is unlawful and offenders may be prosecuted to the fullest extent of the law. Unless otherwise stated the results shown in this test report refer only to the sample(s) tested.
Attention: To check the authenticity of testing /inspection report & certificate, please contact us at telephone: (86-755) 8307 1443, or email: CN.Doccheck@sgs.com

3rd Building,No.889 Yishan Road Xuhui District,Shanghai China 200233
中国·上海·徐汇区宜山路889号3号楼 邮编: 200233
t E&E (86-21) 61402553 www.sgsgroup.com.cn
t HL (86-21) 61402594 sgs.china@sgs.com

Member of the SGS Group (SGS SA)

SGS

检测报告 编号：SHAEC26008284106 日期：2026 年 04 月 08 日 第 8 页，共 10 页

A1251	A1252	A1253	A1254	A1255	A1256	A1257	A1258	A1259
A1501	A1502	A1503	A1504	A1505	A1506	A1507	A1508	A1509
A2001	A2002	A2003	A2004	A2005	A2006	A2007	A2008	A2009
A2010	A2011	A2012	A2013	A2014	A2015	A2016	A2017	A2018
A2501	A2502	A2503	A2504	A2505	A2506	A2507	A2508	A2509
A25010	A25011	A25012	A25013	A25014	A25015	A25016	A25017	A25018
A2541	A2542	A2543	A2544	A2545	A2546	A2547	A2548	A2549
A3001	A3002	A3003	A3004	A3005	A3006	A3007	A3008	A3009
A3301	A3302	A3303	A3304	A3305	A3306	A3307	A3308	A3309
A3961	A3962	A3963	A3964	A3965	A3966	A3967	A3968	A3969
A4201	A4202	A4203	A4204	A4205	A4206	A4207	A4208	A4209
A5001	A5002	A5003	A5004	A5005	A5006	A5007	A5008	A5009
A5081	A5082	A5083	A5084	A5085	A5086	A5087	A5088	A5089
A6501	A6502	A6503	A6504	A6505	A6506	A6507	A6508	A6509
B1251	B1252	B1253	B1254	B1255	B1256	B1257	B1258	B1259
B1501	B1502	B1503	B1504	B1505	B1506	B1507	B1508	B1509
B2001	B2002	B2003	B2004	B2005	B2006	B2007	B2008	B2009
B2501	B2502	B2503	B2504	B2505	B2506	B2507	B2508	B2509
B2541	B2542	B2543	B2544	B2545	B2546	B2547	B2548	B2549
B76201	B76202	B76203	B76204	B76205	B76206	B76207	B76208	B76209
B13001	B13002	B13003	B13004	B13005	B13006	B13007	B13008	B13009

C01581	C01582	C01583	C01584	C01585	C01586	C01587	C01588	C01589
C1251	C1252	C1253	C1254	C1255	C1256	C1257	C1258	C1259
C1501	C1502	C1503	C1504	C1505	C1506	C1507	C1508	C1509
C2001	C2002	C2003	C2004	C2005	C2006	C2007	C2008	C2009
C2501	C2502	C2503	C2504	C2505	C2506	C2507	C2508	C2509
C25010	C25011	C25012	C25013	C25014	C25015	C25016	C25017	C25018
C2541	C2542	C2543	C2544	C2545	C2546	C2547	C2548	C2549
C3001	C3002	C3003	C3004	C3005	C3006	C3007	C3008	C3009
C3501	C3502	C3503	C3504	C3505	C3506	C3507	C3508	C3509
C3681	C3682	C3683	C3684	C3685	C3686	C3687	C3688	C3689
C3961	C3962	C3963	C3964	C3965	C3966	C3967	C3968	C3969
C4001	C4002	C4003	C4004	C4005	C4006	C4007	C4008	C4009
C4141	C4142	C4143	C4144	C4145	C4146	C4147	C4148	C4149
C4201	C4202	C4203	C4204	C4205	C4206	C4207	C4208	C4209
C4501	C4502	C4503	C4504	C4505	C4506	C4507	C4508	C4509
C5001	C5002	C5003	C5004	C5005	C5006	C5007	C5008	C5009
C6201	C6202	C6203	C6204	C6205	C6206	C6207	C6208	C6209
C6351	C6352	C6353	C6354	C6355	C6356	C6357	C6358	C6359
D2801	D2802	D2803	D2804	D2805	D2806	D2807	D2808	D2809
D4801	D4802	D4803	D4804	D4805	D4806	D4807	D4808	D4809
D5201	D5202	D5203	D5204	D5205	D5206	D5207	D5208	D5209
D6301	D6302	D6303	D6304	D6305	D6306	D6307	D6308	D6309
D6201	D6202	D6203	D6204	D6205	D6206	D6207	D6208	D6209
D7001	D7002	D7003	D7004	D7005	D7006	D7007	D7008	D7009
F0501	F0502	F0503	F0504	F0505	F0506	F0507	F0508	F0509
F05010	F05011	F05012	F05013	F05014	F05015	F05016	F05017	F05018
F1001	F1002	F1003	F1004	F1005	F1006	F1007	F1008	F1009
F10010	F10011	F10012	F10013	F10014	F10015	F10016	F10017	F10018
F2541	F2542	F2543	F2544	F2545	F2546	F2547	F2548	F2549
P0001	P0002	P0003	P0004	P0005	P0006	P0007	P0008	P0009

Unless otherwise agreed in writing, this document is issued by the Company subject to its General Conditions of Service printed overleaf, available on request or accessible at https://www.sgs.com/en/Terms-and-Conditions. Attention is drawn to the limitation of liability, indemnification and jurisdiction issues defined therein. Any holder of this document is advised that information contained hereon reflects the Company's findings at the time of its intervention only and within the limits of Client's instructions, if any. The Company's sole responsibility is to its Client and this document does not exonerate parties to a transaction from exercising all their rights and obligations under the transaction documents. This document cannot be reproduced except in full, without prior written approval of the Company. Any unauthorized alteration, forgery or falsification of the content or appearance of this document is unlawful and offenders may be prosecuted to the fullest extent of the law. Unless otherwise stated the results shown in this test report refer only to the sample(s) tested.
Attention: To check the authenticity of testing /inspection report & certificate, please contact us at telephone: (86-755) 8307 1443, or email: CN.Doccheck@sgs.com

3rd Building,No.889 Yishan Road Xuhui District,Shanghai China 200233
中国·上海·徐汇区宜山路889号3号楼 邮编: 200233
t E&E (86-21) 61402553 www.sgsgroup.com.cn
t HL (86-21) 61402594 sgs.china@sgs.com

Member of the SGS Group (SGS SA)

SGS

检测报告 **编号：**SHAEC26008284106 **日期：**2026 年 04 月 08 日 第 9 页，共 10 页

P0010 P0011 P0012 P0013 P0014 P0015 P0016 P0017 P0018
P0019 P0020 P0021 P0022 P0023 P0024 P0025 P0026 P0027
D2301 D2302 D2303 D2304 D2305 D2306 D2307 D2308 D2309
D6001 D6002 D6003 D6004 D6005 D6006 D6007 D6008 D6009
D2201 D2202 D2203 D2204 D2205 D2206 D2207 D2208 D2209
B10901 B13601 C6001 C6002 C6003 C6004 A20010 A20011 P0028
P0029 P0030 P0031 B11001 C2201 C2202 C4101 C6701 C6702
D630J D700G A20012 P0032 B4001 A0801 A1271 A1803
A10001 A4141 A7501 A7502 A3501 A1201 A4001 A6351 B14501
A20013 A1202 D2501 A1801 A1802 C5081 C5082 C5083 C5084 C5085
C5081~C5085 D9601 D280J D480J 260V B3501 P0034 D400G D200J D630K A3502
B1230 P0033 N0001 N0002 AMH200C PHSDR NC1.2 KP1.1 N7830A B12301 LHE6508
NP A3201 C3201 A3202 C3202 A3203 C3203 A3204 C3204
SHLD，SHLV，35153，PDL3.96，2511，A25019，A25020，A25021，SCN 拼接，B9201，927833，PS-110，PS-187-2B，PS-250-2A，DC001，DC002，PT250-W，PT18708-W，D158，D300，D350，D470，P0035，P0036，A8001，B16001，A4701，A2201，A6001，B14001，C5101，C3651，C3652，C40010，B21001，A5701，A0803，B08031，B08032，B05031，B05032，B08033，B08034，F0301，F0501，F1001，F1251，F2541，GHD，XHDB，MKH/MKS，YST025，51065，25072，90142，3.96 刺破，504050，XHDS，20534，FB001，A3751

Unless otherwise agreed in writing, this document is issued by the Company subject to its General Conditions of Service printed overleaf, available on request or accessible at https://www.sgs.com/en/Terms-and-Conditions. Attention is drawn to the limitation of liability, indemnification and jurisdiction issues defined therein. Any holder of this document is advised that information contained hereon reflects the Company's findings at the time of its intervention only and within the limits of Client's instructions, if any. The Company's sole responsibility is to its Client and this document does not exonerate parties to a transaction from exercising all their rights and obligations under the transaction documents. This document cannot be reproduced except in full, without prior written approval of the Company. Any unauthorized alteration, forgery or falsification of the content or appearance of this document is unlawful and offenders may be prosecuted to the fullest extent of the law. Unless otherwise stated the results shown in this test report refer only to the sample(s) tested.
Attention: To check the authenticity of testing /inspection report & certificate, please contact us at telephone: (86-755) 8307 1443, or email: CN.Doccheck@sgs.com

3rd Building,No.889 Yishan Road Xuhui District,Shanghai China 200233
中国·上海·徐汇区宜山路889号3号楼 邮编: 200233
t E&E (86-21) 61402553 www.sgsgroup.com.cn
t HL (86-21) 61402594 sgs.china@sgs.com

Member of the SGS Group (SGS SA)

SGS

检测报告 **编号：**SHAEC26008284106 **日期：**2026 年 04 月 08 日 第 10 页，共 10 页

样品照片：

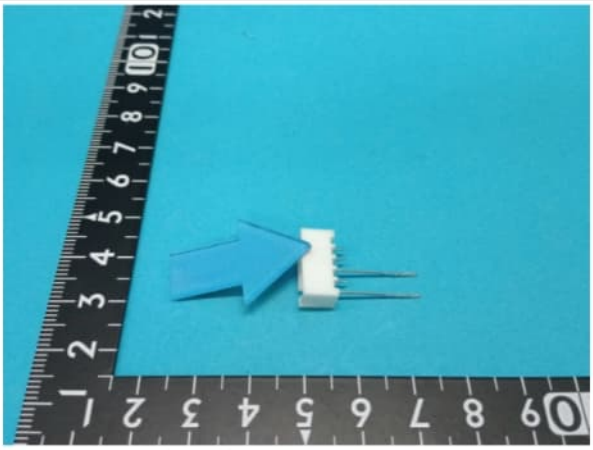

SHA26-0082841-0001.C001

此照片仅限于随 SGS 正本报告使用

报告结束

Unless otherwise agreed in writing, this document is issued by the Company subject to its General Conditions of Service printed overleaf, available on request or accessible at https://www.sgs.com/en/Terms-and-Conditions. Attention is drawn to the limitation of liability, indemnification and jurisdiction issues defined therein. Any holder of this document is advised that information contained hereon reflects the Company's findings at the time of its intervention only and within the limits of Client's instructions, if any. The Company's sole responsibility is to its Client and this document does not exonerate parties to a transaction from exercising all their rights and obligations under the transaction documents. This document cannot be reproduced except in full, without prior written approval of the Company. Any unauthorized alteration, forgery or falsification of the content or appearance of this document is unlawful and offenders may be prosecuted to the fullest extent of the law. Unless otherwise stated the results shown in this test report refer only to the sample(s) tested.
Attention: To check the authenticity of testing /inspection report & certificate, please contact us at telephone: (86-755) 8307 1443, or email: CN.Doccheck@sgs.com

3rd Building,No.889 Yishan Road Xuhui District,Shanghai China 200233
中国·上海·徐汇区宜山路889号3号楼 邮编: 200233
t E&E (86-21) 61402553 www.sgsgroup.com.cn
t HL (86-21) 61402594 sgs.china@sgs.com

Member of the SGS Group (SGS SA)

中国认可
国际互认
检测
TESTING
CNAS L0599

检测报告

编号：SHAEC26005175412　　**日期：**2026 年 03 月 10 日　　第 1 页，共 8 页

客户名称：　浙江联和电子有限公司

客户地址：　浙江省乐清市乐清湾港区乐商创业园
浙江省乐清市乐清湾港区电子信息产业园红旗路 8 号

样品名称：　端子 针

客户参考信息：　见附件

以上样品及信息由客户提供。

SGS 工作编号：　TIC1020260303165900PBTB

样品接收时间：　2026 年 03 月 04 日

检测周期：　2026 年 03 月 04 日 ~ 2026 年 03 月 10 日

检测要求：　根据客户要求检测。

检测方法：　见后续页。

检测结果：　见后续页。

检测要求	结论
欧盟 RoHS 指令 2011/65/EU 附录 II 的修正指令(EU) 2015/863-铅、汞、镉和六价铬	符合

通标标准技术服务（上海）有限公司
授权签名

Jenny Lan 兰柳珍
批准签署人

Scan to see the report
DB042F9F

Unless otherwise agreed in writing, this document is issued by the Company subject to its General Conditions of Service printed overleaf, available on request or accessible at https://www.sgs.com/en/Terms-and-Conditions. Attention is drawn to the limitation of liability, indemnification and jurisdiction issues defined therein. Any holder of this document is advised that information contained hereon reflects the Company's findings at the time of its intervention only and within the limits of Client's instructions, if any. The Company's sole responsibility is to its Client and this document does not exonerate parties to a transaction from exercising all their rights and obligations under the transaction documents. This document cannot be reproduced except in full, without prior written approval of the Company. Any unauthorized alteration, forgery or falsification of the content or appearance of this document is unlawful and offenders may be prosecuted to the fullest extent of the law. Unless otherwise stated the results shown in this test report refer only to the sample(s) tested.
Attention: To check the authenticity of testing /inspection report & certificate, please contact us at telephone: (86-755) 8307 1443, or email: CN.Doccheck@sgs.com

3rd Building,No.889 Yishan Road Xuhui District,Shanghai China 200233
中国·上海·徐汇区宜山路889号3号楼 邮编: 200233
t E&E (86-21) 61402553　www.sgsgroup.com.cn
t HL (86-21) 61402594　sgs.china@sgs.com

Member of the SGS Group (SGS SA)

SGS

检测报告 **编号：**SHAEC26005175412 **日期：**2026 年 03 月 10 日 第 2 页，共 8 页

检测结果：

检测部件外观描述:

样品序号	样品编号	SGS 样品 ID	样品描述
SN1	A1	SHA26-0051754-0001.C001	银色金属

备注：
(1) 1 mg/kg = 1 ppm = 0.0001%
(2) MDL= 方法检出限
(3) ND = 未检出(< MDL)
(4) "-" = 未规定

欧盟 RoHS 指令 2011/65/EU 附录 II 的修正指令(EU) 2015/863-铅、汞、镉和六价铬

检测方法： 参考 IEC 62321-4:2013+AMD1:2017，IEC 62321-5:2013 和 IEC 62321-7-1:2015，采用 ICP-OES/AAS 和 UV-Vis 进行分析。

检测项目	限值	单位	MDL	A1
铅 (Pb)	1000	mg/kg	2	14
汞 (Hg)	1000	mg/kg	2	ND
镉 (Cd)	100	mg/kg	2	ND
六价铬 (Cr(VI))▼	-	μg/cm²	0.10	ND

备注：
(1) 最大允许极限值引用自RoHS指令(EU) 2015/863。
(2) IEC 62321系列等同于 EN 62321系列。
(3) ▼ = a. 当六价铬的浓度高于0.13 μg/cm²时，样品为阳性，即含有六价铬；
b. 当六价铬的浓度为ND (低于0.10 μg/cm²) 时，样品为阴性，即未检测到六价铬；
c. 当六价铬的浓度介于0.10 μg/cm²与0.13 μg/cm²之间时，无法直接判定是否检测到六价铬，因不同个体的样品表面差异可能会影响测定结果。

由于未获知样品的存储条件和生产日期，样品的六价铬检测结果仅能代表检测时样品含六价铬的状态。

除非另有说明，参照 ILAC-G8:09/2019，使用简单接受（*w*=0）的二元判定规则进行符合性判定。
除非另有说明，此报告结果仅对检测的样品负责。本报告未经本公司书面许可，不可部分复制。

Unless otherwise agreed in writing, this document is issued by the Company subject to its General Conditions of Service printed overleaf, available on request or accessible at https://www.sgs.com/en/Terms-and-Conditions. Attention is drawn to the limitation of liability, indemnification and jurisdiction issues defined therein. Any holder of this document is advised that information contained hereon reflects the Company's findings at the time of its intervention only and within the limits of Client's instructions, if any. The Company's sole responsibility is to its Client and this document does not exonerate parties to a transaction from exercising all their rights and obligations under the transaction documents. This document cannot be reproduced except in full, without prior written approval of the Company. Any unauthorized alteration, forgery or falsification of the content or appearance of this document is unlawful and offenders may be prosecuted to the fullest extent of the law. Unless otherwise stated the results shown in this test report refer only to the sample(s) tested.
Attention: To check the authenticity of testing /inspection report & certificate, please contact us at telephone: (86-755) 8307 1443, or email: CN.Doccheck@sgs.com

3rd Building,No.889 Yishan Road Xuhui District,Shanghai China 200233
中国·上海·徐汇区宜山路889号3号楼 邮编: 200233
t E&E (86-21) 61402553 www.sgsgroup.com.cn
t HL (86-21) 61402594 sgs.china@sgs.com

Member of the SGS Group (SGS SA)

SGS

检测报告 **编号：**SHAEC26005175412 **日期：**2026 年 03 月 10 日 第 3 页，共 8 页

附件

元素检测流程图

样品按照下述流程被完全消解

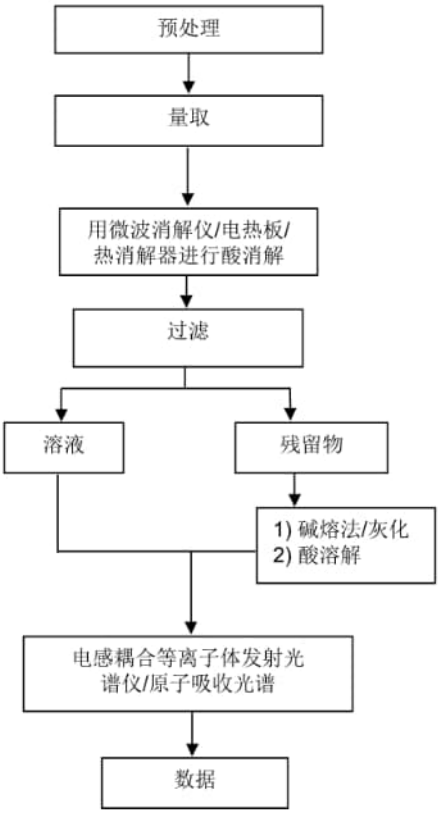

Unless otherwise agreed in writing, this document is issued by the Company subject to its General Conditions of Service printed overleaf, available on request or accessible at https://www.sgs.com/en/Terms-and-Conditions. Attention is drawn to the limitation of liability, indemnification and jurisdiction issues defined therein. Any holder of this document is advised that information contained hereon reflects the Company's findings at the time of its intervention only and within the limits of Client's instructions, if any. The Company's sole responsibility is to its Client and this document does not exonerate parties to a transaction from exercising all their rights and obligations under the transaction documents. This document cannot be reproduced except in full, without prior written approval of the Company. Any unauthorized alteration, forgery or falsification of the content or appearance of this document is unlawful and offenders may be prosecuted to the fullest extent of the law. Unless otherwise stated the results shown in this test report refer only to the sample(s) tested.
Attention: To check the authenticity of testing /inspection report & certificate, please contact us at telephone: (86-755) 8307 1443, or email: CN.Doccheck@sgs.com
3rd Building,No.889 Yishan Road Xuhui District,Shanghai China 200233
中国·上海·徐汇区宜山路889号3号楼 邮编: 200233
t E&E (86-21) 61402553 www.sgsgroup.com.cn
t HL (86-21) 61402594 sgs.china@sgs.com
Member of the SGS Group (SGS SA)

附件

六价铬检测流程图

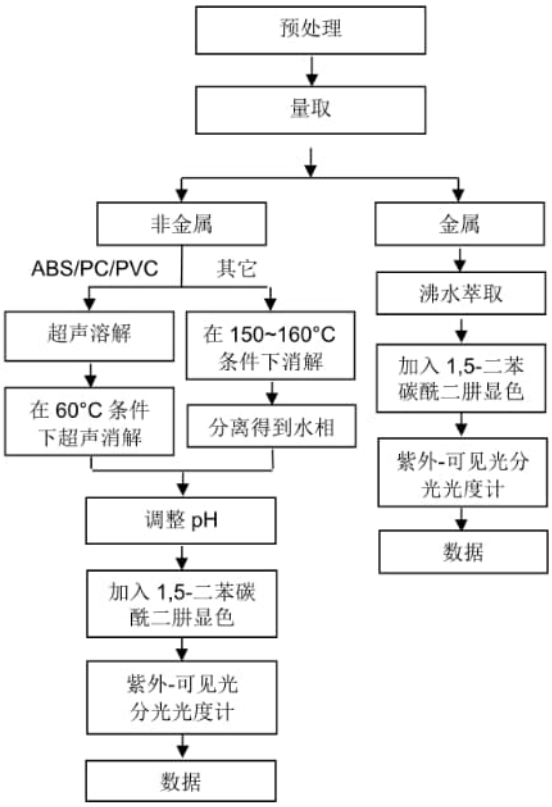

Unless otherwise agreed in writing, this document is issued by the Company subject to its General Conditions of Service printed overleaf, available on request or accessible at https://www.sgs.com/en/Terms-and-Conditions. Attention is drawn to the limitation of liability, indemnification and jurisdiction issues defined therein. Any holder of this document is advised that information contained hereon reflects the Company's findings at the time of its intervention only and within the limits of Client's instructions, if any. The Company's sole responsibility is to its Client and this document does not exonerate parties to a transaction from exercising all their rights and obligations under the transaction documents. This document cannot be reproduced except in full, without prior written approval of the Company. Any unauthorized alteration, forgery or falsification of the content or appearance of this document is unlawful and offenders may be prosecuted to the fullest extent of the law. Unless otherwise stated the results shown in this test report refer only to the sample(s) tested.
Attention: To check the authenticity of testing /inspection report & certificate, please contact us at telephone: (86-755) 8307 1443, or email: CN.Doccheck@sgs.com
3rd Building,No.889 Yishan Road Xuhui District,Shanghai China 200233
中国·上海·徐汇区宜山路889号3号楼 邮编: 200233
t E&E (86-21) 61402553 www.sgsgroup.com.cn
t HL (86-21) 61402594 sgs.china@sgs.com
Member of the SGS Group (SGS SA)

SGS

检测报告 **编号：**SHAEC26005175412 **日期：**2026 年 03 月 10 日 第 5 页，共 8 页

附件：

1.0，SH，SHD，1.25，51021，DF14，DF13，GH，ZH，PH，PHB，PA，PHSD，DF11，C1251，51047，51146，FI-S，PHD，YHD200，PA，SMP，SMW，SMH，SMH200，SMH200-H，YH200，20039WR，杜邦 2.0，杜邦 2.0 排针/排母，杜邦 2.54 排针/排母，XH/TJC3，XA，HA，XHB，XHD，XHE，EH，EI，5263，5264，5267，5268，SZN，SAN，SCN，SCND，SCNB, JC15，JC20，JC25，5102，5240，SMH250，SMP250，SMW250，25048HS，25045HP，SM，TJC8, 杜邦 2.54，TJC8A，杜邦带锁，TJC8B，TJC8H，5051，2510，美尚美，43640，43645，43020，43025，5500，5600，VH，VHRR，YH396，VHR，35156，2139，3.96，90331，5195，5196，39612，FL，5557，5559，5566，5569，SL，RV42，EL，YL，8981，5058，5.08，L6.2，VL，VLP/VLR，TJC2，TJC2A，TJC2B，TJC4，TJC1，1806，MX3.0，1.58，51005，51006，BH3.5，BH4.0，63080，51004，TJC15，A4203，CL014，OTP，MKH，SMF，Cy-X201，35108，35150，35151，35224，35180，35965，42021，42022，42002，35955，SA，SCS，35189，35196，CH10，CH2.5，543，SLP，SLR，YHL500，YWL500，FFC，FPC，20030，250，LGC，S11，YH025，35155，25415，5197，5198，110，2.8，6.3，SCS

NH，XHQ，42474，42475，QH，NV，50300，50301，5025，3191，5199，STV5，YHL500，YWL500，F001，F002，D440，D600，D620，D700，D220，D230，D250，D480，D520，D280，D630，D430，D400，D450，U-T，F1001-T，SIN-T，774，773，778，294，TU-JTK(SV)，TU(SNB)，TO-JTK(RV)，MDD，FDD，TG-JT，IDC，AUTO，CONNECTOR，DJ70，DT04，DT06，UY/K1，UY2/K2，UR/K3，UR2，UB/K4，UB2A，UG/K5，U1R/K8，U1B/K9，HJKT10，UDW2，314，A5001，A5002，MC100，FPC2.54，SGN，PHR，ZHR，ZHB，205，5.2，C1801，C1802，2060，A5003，ME020，ME010，FPC/FFC，B2541，1971845，1971846，2232043，2232044，2232511，1971895，1971896，JWPF，SY，Molex1.5，ME0100，RAST，A5004，DV，SJN，SDN，35182，35524，RCY，LC，VR，SHJ，SHL，DF19，ACH，IL-Z，SATA，XSR，SUR，SUH，ZE，ZND，ZPD，SFH，PUD，AMP2.0，35507，DF3，PND，RE，RA，RF，SYP/SYR，HIF3，MC100/ME020/ME010，F2541，VHB，VHC，VHD

SHB1.0, NHB1.0, FIS, VHE, 35313, 30PIN, PR9-409, PR5-70-1, PR5-24, 5240B, 5500B, 5600B,13006,13007, 3DLG06FW, 1719057, 1719058, 1719059, CS28H, 9102501, 9103101, 9111001, PP0311401, 33EMMT26FBK, 3CN2BH02, 3FW06FBM, PP0426613, PP0426202, GIC3.3, 1376421-1, XADR, XADRR, 179846, 179849, XHR, 50235, PAD, PNI, SDL2.5, PS-250-2A-15, 4.8, 62306, H9002, DC4235, 62308, 62420-1, B35E0, 63658-1, 1060-16-0122, RH0409000142, RH011810030061, RH040499000142, RH011810030090, 299900421692, 33146412, 1.25 插板, SPS-01T-110, 282104-1, 282105-1, 282110-1, 282109-1, 21T1000501, 20T1001001, PP043531T, XNIRP, XL, 1123343-1, DF16, 1473413-1, 12147302, MG641234-5, PHBS,0.8, Molex1.2, 35746, 35748, APM2.54

1969738, 1969740, 1971845, 1971846, 1971895, 1971896, 1971946 thru 1971949, 1971954 thru 1971957, 2232008 thru 2232011, 2232000 thru 2232003, 2232016 thru 2232019, 1971962 thru 1971965, 2232024 thru 2232027, 2232289 thru 2232292, 2232043 thru 2232074, 2232298 thru 2232301, 2232511, 2232532, 2232557, 2232559, 2232560, 2232562, 2232563, 2232565, 2232566, 2232568, 2232569, 2232571, 2232572, 2232574, 2232575, 2232577, 2232578, 2232580, 2232581, 2232583, 2232584, 2232586, 2232587, 2232589, 2232590, 2232592, 2232593, 2232595, 2232596, 2232598, 2232599, 2232601, 2232602, 2232604, 2232605, 2232607, 2232608, 2232611 thru 2232682, 2292457, 2292458, 1064,2064,3064,1080,2080,3080,1100,2100,3100,1120, 2120,3120,1150,2150,3150, 1180,2180,3180,1230,2230, 3230,1250,2250,3250,1280,2280,3280,1300,2300,3300, 1480,2480,3480, 1630,2630,3630,1780,2780,3780,1950, 2950,3950,1010,2010,3010,1013,2013,3013,1015,2015, 3015, 1016,2016,3016,1025,2025,3025,1035,2035,3035, 1045,2045,3045,1058,2058,3058,1999,2999,3999, 401,402,403,503,TPA,BX,CPA, 404, 501, 502,0010713201
A1001 A1002 A1003 A1004 A1005 A1006 A1007 A1008 A1009

Unless otherwise agreed in writing, this document is issued by the Company subject to its General Conditions of Service printed overleaf, available on request or accessible at https://www.sgs.com/en/Terms-and-Conditions. Attention is drawn to the limitation of liability, indemnification and jurisdiction issues defined therein. Any holder of this document is advised that information contained hereon reflects the Company's findings at the time of its intervention only and within the limits of Client's instructions, if any. The Company's sole responsibility is to its Client and this document does not exonerate parties to a transaction from exercising all their rights and obligations under the transaction documents. This document cannot be reproduced except in full, without prior written approval of the Company. Any unauthorized alteration, forgery or falsification of the content or appearance of this document is unlawful and offenders may be prosecuted to the fullest extent of the law. Unless otherwise stated the results shown in this test report refer only to the sample(s) tested.
Attention: To check the authenticity of testing /inspection report & certificate, please contact us at telephone: (86-755) 8307 1443, or email: CN.Doccheck@sgs.com

3rd Building,No.889 Yishan Road Xuhui District,Shanghai China 200233
中国·上海·徐汇区宜山路889号3号楼 邮编: 200233
t E&E (86-21) 61402553 www.sgsgroup.com.cn
t HL (86-21) 61402594 sgs.china@sgs.com

Member of the SGS Group (SGS SA)

SGS

检测报告 **编号：**SHAEC26005175412 **日期：**2026 年 03 月 10 日 第 6 页，共 8 页

A1251	A1252	A1253	A1254	A1255	A1256	A1257	A1258	A1259
A1501	A1502	A1503	A1504	A1505	A1506	A1507	A1508	A1509
A2001	A2002	A2003	A2004	A2005	A2006	A2007	A2008	A2009
A2010	A2011	A2012	A2013	A2014	A2015	A2016	A2017	A2018
A2501	A2502	A2503	A2504	A2505	A2506	A2507	A2508	A2509
A25010	A25011	A25012	A25013	A25014	A25015	A25016	A25017	A25018
A2541	A2542	A2543	A2544	A2545	A2546	A2547	A2548	A2549
A3001	A3002	A3003	A3004	A3005	A3006	A3007	A3008	A3009
A3301	A3302	A3303	A3304	A3305	A3306	A3307	A3308	A3309
A3961	A3962	A3963	A3964	A3965	A3966	A3967	A3968	A3969
A4201	A4202	A4203	A4204	A4205	A4206	A4207	A4208	A4209
A5001	A5002	A5003	A5004	A5005	A5006	A5007	A5008	A5009
A5081	A5082	A5083	A5084	A5085	A5086	A5087	A5088	A5089
A6501	A6502	A6503	A6504	A6505	A6506	A6507	A6508	A6509
B1251	B1252	B1253	B1254	B1255	B1256	B1257	B1258	B1259
B1501	B1502	B1503	B1504	B1505	B1506	B1507	B1508	B1509
B2001	B2002	B2003	B2004	B2005	B2006	B2007	B2008	B2009
B2501	B2502	B2503	B2504	B2505	B2506	B2507	B2508	B2509
B2541	B2542	B2543	B2544	B2545	B2546	B2547	B2548	B2549
B76201	B76202	B76203	B76204	B76205	B76206	B76207	B76208	B76209
B13001	B13002	B13003	B13004	B13005	B13006	B13007	B13008	B13009

C01581	C01582	C01583	C01584	C01585	C01586	C01587	C01588	C01589
C1251	C1252	C1253	C1254	C1255	C1256	C1257	C1258	C1259
C1501	C1502	C1503	C1504	C1505	C1506	C1507	C1508	C1509
C2001	C2002	C2003	C2004	C2005	C2006	C2007	C2008	C2009
C2501	C2502	C2503	C2504	C2505	C2506	C2507	C2508	C2509
C25010	C25011	C25012	C25013	C25014	C25015	C25016	C25017	C25018
C2541	C2542	C2543	C2544	C2545	C2546	C2547	C2548	C2549
C3001	C3002	C3003	C3004	C3005	C3006	C3007	C3008	C3009
C3501	C3502	C3503	C3504	C3505	C3506	C3507	C3508	C3509
C3681	C3682	C3683	C3684	C3685	C3686	C3687	C3688	C3689
C3961	C3962	C3963	C3964	C3965	C3966	C3967	C3968	C3969
C4001	C4002	C4003	C4004	C4005	C4006	C4007	C4008	C4009
C4141	C4142	C4143	C4144	C4145	C4146	C4147	C4148	C4149
C4201	C4202	C4203	C4204	C4205	C4206	C4207	C4208	C4209
C4501	C4502	C4503	C4504	C4505	C4506	C4507	C4508	C4509
C5001	C5002	C5003	C5004	C5005	C5006	C5007	C5008	C5009
C6201	C6202	C6203	C6204	C6205	C6206	C6207	C6208	C6209
C6351	C6352	C6353	C6354	C6355	C6356	C6357	C6358	C6359
D2801	D2802	D2803	D2804	D2805	D2806	D2807	D2808	D2809
D4801	D4802	D4803	D4804	D4805	D4806	D4807	D4808	D4809
D5201	D5202	D5203	D5204	D5205	D5206	D5207	D5208	D5209
D6301	D6302	D6303	D6304	D6305	D6306	D6307	D6308	D6309
D6201	D6202	D6203	D6204	D6205	D6206	D6207	D6208	D6209
D7001	D7002	D7003	D7004	D7005	D7006	D7007	D7008	D7009
F0501	F0502	F0503	F0504	F0505	F0506	F0507	F0508	F0509
F05010	F05011	F05012	F05013	F05014	F05015	F05016	F05017	F05018
F1001	F1002	F1003	F1004	F1005	F1006	F1007	F1008	F1009
F10010	F10011	F10012	F10013	F10014	F10015	F10016	F10017	F10018
F2541	F2542	F2543	F2544	F2545	F2546	F2547	F2548	F2549
P0001	P0002	P0003	P0004	P0005	P0006	P0007	P0008	P0009

Unless otherwise agreed in writing, this document is issued by the Company subject to its General Conditions of Service printed overleaf, available on request or accessible at https://www.sgs.com/en/Terms-and-Conditions. Attention is drawn to the limitation of liability, indemnification and jurisdiction issues defined therein. Any holder of this document is advised that information contained hereon reflects the Company's findings at the time of its intervention only and within the limits of Client's instructions, if any. The Company's sole responsibility is to its Client and this document does not exonerate parties to a transaction from exercising all their rights and obligations under the transaction documents. This document cannot be reproduced except in full, without prior written approval of the Company. Any unauthorized alteration, forgery or falsification of the content or appearance of this document is unlawful and offenders may be prosecuted to the fullest extent of the law. Unless otherwise stated the results shown in this test report refer only to the sample(s) tested.
Attention: To check the authenticity of testing /inspection report & certificate, please contact us at telephone: (86-755) 8307 1443, or email: CN.Doccheck@sgs.com

3rd Building,No.889 Yishan Road Xuhui District,Shanghai China 200233
中国·上海·徐汇区宜山路889号3号楼 邮编: 200233
t E&E (86-21) 61402553 www.sgsgroup.com.cn
t HL (86-21) 61402594 sgs.china@sgs.com

Member of the SGS Group (SGS SA)

SGS

检测报告 **编号：**SHAEC26005175412 **日期：**2026 年 03 月 10 日 第 7 页，共 8 页

P0010 P0011 P0012 P0013 P0014 P0015 P0016 P0017 P0018
P0019 P0020 P0021 P0022 P0023 P0024 P0025 P0026 P0027
D2301 D2302 D2303 D2304 D2305 D2306 D2307 D2308 D2309
D6001 D6002 D6003 D6004 D6005 D6006 D6007 D6008 D6009
D2201 D2202 D2203 D2204 D2205 D2206 D2207 D2208 D2209
B10901 B13601 C6001 C6002 C6003 C6004 A20010 A20011 P0028
P0029 P0030 P0031 B11001 C2201 C2202 C4101 C6701 C6702
D630J D700G A20012 P0032 B4001 A0801 A1271 A1803
A10001 A4141 A7501 A7502 A3501 A1201 A4001 A6351 B14501
A20013 A1202 D2501 A1801 A1802 C5081 C5082 C5083 C5084 C5085
C5081~C5085 D9601 D280J D480J 260V B3501 P0034 D400G D200J D630K A3502
B1230 P0033 N0001 N0002 AMH200C PHSDR NC1.2 KP1.1 N7830A B12301 LHE6508
NP A3201 C3201 A3202 C3202 A3203 C3203 A3204 C3204
SHLD，SHLV，35153，PDL3.96，2511，A25019，A25020，A25021，SCN 拼接，B9201，927833，PS-110，PS-187-2B，PS-250-2A，DC001，DC002，PT250-W，PT18708-W，D158，D300，D350，D470，P0035，P0036，A8001，B16001，A4701，A2201，A6001，B14001，C5101，C3651，C3652，C40010，B21001，A5701，A0803，B08031，B08032，B05031，B05032，B08033，B08034，F0301，F0501，F1001，F1251，F2541，GHD，XHDB，MKH/MKS，YST025，51065，25072，90142，3.96 刺破，504050，XHDS，20534，FB001，A3751

Unless otherwise agreed in writing, this document is issued by the Company subject to its General Conditions of Service printed overleaf, available on request or accessible at https://www.sgs.com/en/Terms-and-Conditions. Attention is drawn to the limitation of liability, indemnification and jurisdiction issues defined therein. Any holder of this document is advised that information contained hereon reflects the Company's findings at the time of its intervention only and within the limits of Client's instructions, if any. The Company's sole responsibility is to its Client and this document does not exonerate parties to a transaction from exercising all their rights and obligations under the transaction documents. This document cannot be reproduced except in full, without prior written approval of the Company. Any unauthorized alteration, forgery or falsification of the content or appearance of this document is unlawful and offenders may be prosecuted to the fullest extent of the law. Unless otherwise stated the results shown in this test report refer only to the sample(s) tested.
Attention: To check the authenticity of testing /inspection report & certificate, please contact us at telephone: (86-755) 8307 1443, or email: CN.Doccheck@sgs.com

3rd Building,No.889 Yishan Road Xuhui District,Shanghai China 200233
中国·上海·徐汇区宜山路889号3号楼 邮编: 200233
t E&E (86-21) 61402553 www.sgsgroup.com.cn
t HL (86-21) 61402594 sgs.china@sgs.com

Member of the SGS Group (SGS SA)

SGS

检测报告 **编号：**SHAEC26005175412 **日期：**2026 年 03 月 10 日 第 8 页，共 8 页

样品照片：

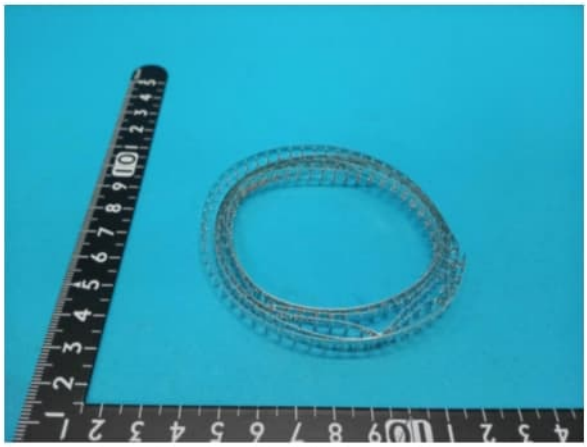

SHA26-0051754-0001.C001

此照片仅限于随 SGS 正本报告使用

报告结束

Unless otherwise agreed in writing, this document is issued by the Company subject to its General Conditions of Service printed overleaf, available on request or accessible at https://www.sgs.com/en/Terms-and-Conditions. Attention is drawn to the limitation of liability, indemnification and jurisdiction issues defined therein. Any holder of this document is advised that information contained hereon reflects the Company's findings at the time of its intervention only and within the limits of Client's instructions, if any. The Company's sole responsibility is to its Client and this document does not exonerate parties to a transaction from exercising all their rights and obligations under the transaction documents. This document cannot be reproduced except in full, without prior written approval of the Company. Any unauthorized alteration, forgery or falsification of the content or appearance of this document is unlawful and offenders may be prosecuted to the fullest extent of the law. Unless otherwise stated the results shown in this test report refer only to the sample(s) tested.
Attention: To check the authenticity of testing /inspection report & certificate, please contact us at telephone: (86-755) 8307 1443, or email: CN.Doccheck@sgs.com

3rd Building,No.889 Yishan Road Xuhui District,Shanghai China 200233
中国·上海·徐汇区宜山路889号3号楼 邮编: 200233
t E&E (86-21) 61402553 www.sgsgroup.com.cn
t HL (86-21) 61402594 sgs.china@sgs.com

Member of the SGS Group (SGS SA)

产品名称： PA66 版本日期：15/03/2017

化 学 品 安 全 说 明 书

MSDS

第一部分：化学制品、产品或公司信息

产品名称： PA66
产品别名：聚酰胺
责任方：浙江联和电子有限公司
一般用途:工程热塑性塑料

MSDS编号: PA66

第二部分：合成物或成分信息

组成部分：成分 CAS号码基础树脂 32131-17-2这是一种聚合物材料。所有成分和聚合物系统紧密结合，因此，目前正常的加工和处理情况下没有存在接触的可能性。本产品可能含有专利成分。根据美国《职业安全与卫生条例》，本产品没有被归类为危险品，此化学品安全说明书包含关于安全处理和合理使用本产品的有价值的重要信息。该说明书应妥善保管以便员工或其他使用该产品的用户使用。本产品不受加拿大《工作场所危险物质信息系统》管制。

第三部分：危险鉴定

紧急情况概述：轻微的不规则颗粒物状。燃烧分解可能会产生有危害性的气体基础树脂粉尘或粉末在美国矿务局相关粉尘爆炸的危害等级为低级。熔料可能会导致皮肤或眼睛接触性的热灼伤。此外，溢出的固体硬颗粒可能会造成滑倒的危险。

潜在健康影响：接触方式:皮肤和眼睛接触；气体吸入，如果温度过热的话。征兆症状：没有相关的具体资料。

即刻健康影响：
皮肤：本产品没有相关的具体资料。产品中可能含有的聚合物颗粒和纤维增强也可能会造成机械性的伤害。热性或熔化材料有潜在的可能导致热灼伤。
眼睛:本产品没有相关的具体资料。产品中可能含有的聚合物颗粒和纤维增强也可能会造成机械性的伤害。

吸入：	本产品没有相关的具体资料。从供应的形式来看，本产品不存在被吸入的危险；然而聚合物颗粒可能被认为一种是惰性的微害微粒。加热过程中可能会有产生刺激性气体的危险。
摄入：	本产品没有相关的具体资料。但是，基于高分子聚合物的生物活性，摄取本产品预计会造成轻微的毒性。
长期或滞后影响：	没有相关的具体资料。
致癌性：	国际癌症研究机构（ IARC）曾评估过本产品中可能含有的碳黑，并发现它可能对人类有致癌性（ 2B组）。本产品中的任何碳黑成分都被聚合物体系紧密结合，因此，目前正常的加工和处理情况下致癌的几率很小。
医疗条件	
风险加剧：	本产品没有相关的具体资料。废气可能会被释放，如果过热的话，会影响那些有呼吸系统慢性疾病的人。

第四部分：急救措施

皮肤：如果烫的或熔化的聚合物或者热气接触皮肤，迅速用冷水降温。如果聚合物被粘在皮肤上，不要擅自去除，但是允许粘附的聚合物自然脱落，应寻求医学处理。相比聚合物随着时间推移自行脱落而言，擅自去除粘在皮肤上的聚合物，可能会造成更多的组织损伤。

眼睛：用大量的水冲洗。如果仍旧不舒适，应寻求医疗处理，去除异物。

吸入：转移到空气新鲜之处。如果呼吸困难的情况仍然发生，应寻求医学处理。

摄入：如果相当数量的本产品被吞咽，应饮用两杯水来稀释，并寻求医学处理。

医生注意事项：本产品本质上是惰性和无毒的。然而，如果被加热到高温或被燃烧，可能会有气体排放出来（见第五和第十部分的气体排放）。在这些排放的气体中，一氧化碳和一氧化氮昀有可能具有显著的临床毒性。那些曾暴露在有毒气体中的患者需要检查碳氧血红蛋白水平和动脉血气。如果一个酸中毒患者的碳氧血红蛋白水平是正常的，考虑氰化物毒性。如果患者与气体的接触发生在密闭空间内，则存在窒息（二氧化碳逐渐替代氧气）发生的可能性。一氧化氮对呼吸道有着强烈的刺激性。如果患者可能已经吸入高浓度和刺激性的烟雾，应考虑监测肺水肿病延后发生的可能。

第五部分：救火措施

闪点:不适用
危险燃烧产物：一氧化碳、二氧化碳和氮氧化物
灭火介质：水、泡沫材料、二氧化碳或干化学制
剂灭火指南：消防人员应携带自给式呼吸器和全套防护服。消防人员避免逆风救火。水应该用来给火灾中各种容器的降温。水、泡沫和干化学制剂可能会对电器设备造成损伤。

第六部分：意外泄漏对策

泄漏处理程序：用适当工具清扫泄漏场所，收集泄漏物料，以便恢复和处理。

第七部分：处理和储藏

处理：没有合适的器械，不要处理烫的或者熔化的物料。工作场所应保持整洁有序。不要超过推荐的温度，使分解产物的释放昀小化。不要在有聚合物粉尘存在的场所抽烟。在传输和加工的过程中，应采取恰当的措施控制粉尘的产生和积累。
储藏：储藏在阴凉干燥的场所，保证树脂的干燥度。

第八部分：接触控制 /个人防护

工程控制：局部排气：建议在适当的时候以控制员工接触粉尘或蒸汽。总体而言，作为控制员工暴露在粉尘或者蒸汽中的唯一手段，此办法恐怕不能满足需要。
装备推荐：
皮肤：加热或熔化过程中，有机会接触物料时应穿着长裤、长袖、隔
热手套和面罩。
眼睛：推荐安全眼罩。
吸入：如果粉尘或分解气体的产生有可能高于所允许接触的上限值，推荐使用经国家职业安全与健康研究所认证的防毒面罩 /口罩。

接触指导方针 :本产品中可能含有的任何玻璃颗粒被聚合物系统紧密结合。残留的玻璃颗粒（<1%）可能存在，导致机械性的眼部、皮肤和呼吸刺激。包括机械加工或磨削在内的操作或部分应加以审查，以确保颗粒水平低于推荐的标准，本产品可能含有炭黑。见下列的接触极限值。

成分	机构	参数
炭黑	美国职业安全与健康条例 -允许接触极限	3.5 mg/cu m
	美国政府工业卫生专家会议 -临界值限定	3.5 mg/cu m
微害惰性粉尘	[redacted]	[redacted]

第十六部分：其它信息

危害等级：	健康	可燃性	反应性	其它
国家防火协会	1	1	0	
危险物质鉴别系统	1	1	0	

否认声明： 本产品不适用于作为医学或牙科植入物的使用。为获取详细的工艺指导和良好的生产实践（净化、工艺参数、停炉等），请参阅相应的大赛璐公告。据我们所知，这里所含的信息是正确的。我们没有暗示或者保证此文件所列出的危险已经包含全部危险。大赛璐不做任何关于在你方工艺或与其他物质结合过程中安全使用本产品的明示或暗示性的保证。本产品的使用效果可能会因为其他材料的使用而恶化；或者说本产品可能增强，也可能恶化其他材料的使用效果。用户有其责任对任何使用或者使用方式加以仔细考虑并确定物料的适用性。用户必须符合所有适用的安全和健康标准。

编号：LHES006

MSDS

1．物品成分与厂商资料	
厂商名称：浙江联和电子有限公司	物品编号：QSN6.5-0.1
	物品名称：磷铜端子
	纯物质：
	危害物质成分（%）无

2.成份辨识资料		
成份名称	化学文摘社登记号码(CAS No.)	浓度范围（成分百分比 Percentage (%)
铜(Cu)	7440-50-8	余量
磷(P)	7723-14-0	0.0026-0.005%
锌(Zn)	7440-66-6	0.03-0.04%
镍(Ni)	7440-02-0	0.054-0.063%
锑（Sb）	7440-36-0	0.00015%
铅(Pb)	7439-92-1	＜0.005%
铁(Fe)	7439-89-6	0.005-0.0059%
纯镍(Ni)	7440-02-0	0.054-0.063%
纯锡(Sn)	7440-31-5	6.2 %

2．危害辨认资料	
严重危害效应	健康危害效应：本产品在固体时不具健康危害及危害
	环境影响：本产品在固体时对环境不具影响
	物理性及化学性危害:固体/无味/多色
	特殊危害：固体时（防火或高温）无特殊危害
主要症状：无	

3．急救措施	
急救方法	吸入：无吸入
	皮肤接触：接触无危害
	食入：无食入
主要症状及危害效应：无	

4．灭火措施
通用灭火器：二氧化碳，泡沫，干粉化学灭火器，水雾等
灭火时可能遭遇之特殊危害：会引起火灾
消防人员之特殊防护装备：使用从氧式吸防护具

5．泄漏处理方法
个人应注意事项：注意工作台面清洁，作业时及时清洗手
环境注意事项：将泄漏之物料以容器盛装以便回收或废弃
清理方式：工作台面每天作业前/后须檫试干净，建议可以戴手套或手指套作业

6．安全处置与储存方法
处置：废弃物可送到政府许可的废弃物处理中心进行处理

储存：空调仓，23±5℃，湿度 65%以下，仓库里面安装灭火器		
7. 暴露预防措施		
个人防护设备	呼吸防护：口罩，一般无此要求，可以建议采用	
	手部防护设备：手套火手指套，一般无此要求，可以建议采用	
	眼睛防护：安全目镜或眼镜	
	皮肤及身体防护：穿工作服，经常勤洗	
卫生措施：建议使用安全目镜，进食前应洗手及脸部，平时多运动，保持健康体力		
8. 物料及化学性质		
物质状态：固体	形状：连接器	
颜色：多色	气味：无味	
PH 值：未测定	沸点：未测定	
分解温度：未测定	爆炸介限：无	
自然温度：固体无	溶解度：固体无	
9. 安全性及反应性		
安全性：正常状态下安全		
特殊状况下可能之危害反应：无		
应避免之状况：避免接触火源和太阳光直照射		
应避免之物质：火和酸碱性物质		
危害分解物：无		
10. 毒性资料		
急毒性	吸人：无	
	皮肤接触：无	
	眼睛：无	
局部效应：无		特殊效应：无
11. 废弃物处理方法：废弃物可送到政府许可的废弃物处理中心进行处理		
12. 运送资料		
联合国编号：无		运输规定：并无危险分类
运送方法及注意事项：勿重压，轻拿轻放		
13. 适用法规：1.劳工安全卫生设施规划；2.危害物及有害物通讯规划；3.索尼环境通用规定；4 劳工用业环境空气中有害物容许溶度标准；5 道路交通安全规划		
14. 其他资料：		
15.法规资料		
适用法规	1.劳工安全卫生设施规则 2.RoHS 法规及有害物通识规则	
16.其它资料		
参考文献	有害化学物质中文资料库，环保局	
制表单位	浙江联和电子有限公司	
制造商及供应商地址	浙江省温州乐清市乐清湾港区创新路8号	
电话	0577-62383699	
制表者	季育文	
制表日期	2022-3-23	

编号：LHE-S006

成品 MSDS

1．物品成分与厂商资料	
厂商名称：浙江联和电子有限公司	物品编号：LHE-WF1001
	物品名称：黄铜镀锡针
地址：浙江省温州乐清市乐清湾港区创新路8号	纯物质：
联络电话：0577-62383699	危害物质成分（%）无

2.成份辨识资料

成份名称	化学文摘社登记号码(CAS No.)	浓度范围（成分百分比 Percentage (%)
铜(Cu)	7440-50-8	64.9%
磷(P)	7723-14-0	0.001%
锌(Zn)	7440-66-6	余量
镍(Ni)	7440-02-0	0.01%
锑（Sb）	7440-36-0	0.001%
铅(Pb)	7439-92-1	＜0.009%
铁(Fe)	7439-89-6	＜0.1%
纯镍(Ni)	7440-02-0	0.05%
纯锡(Sn)	7440-31-5	0.1%

2．危害辨认资料	
严重危害效应	健康危害效应：本产品在固体时不具健康危害及危害
	环境影响：本产品在固体时对环境不具影响
	物理性及化学性危害:固体/无味/多色
	特殊危害：固体时（防火或高温）无特殊危害
主要症状：无	

3．急救措施	
急救方法	吸入：无吸入
	皮肤接触：接触无危害
	食入：无食入
主要症状及危害效应：无	

4．灭火措施
通用灭火器：二氧化碳，泡沫，干粉化学灭火器，水雾等
灭火时可能遭遇之特殊危害：会引起火灾
消防人员之特殊防护装备：使用从氧式吸防护具

5．泄漏处理方法
个人应注意事项：注意工作台面清洁，作业时及时清洗手
环境注意事项：将泄漏之物料以容器盛装以便回收或废弃
清理方式：工作台面每天作业前/后须檫试干净，建议可以戴手套或手指套作业

6．安全处置与储存方法
处置：废弃物可送到政府许可的废弃物处理中心进行处理

储存：空调仓，23±5℃，湿度 65%以下，仓库里面安装灭火器		
7. 暴露预防措施		
个人防护设备	呼吸防护：口罩，一般无此要求，可以建议采用	
	手部防护设备：手套火手指套，一般无此要求，可以建议采用	
	眼睛防护：安全目镜或眼镜	
	皮肤及身体防护：穿工作服，经常勤洗	
卫生措施：建议使用安全目镜，进食前应洗手及脸部，平时多运动，保持健康体力		
8. 物料及化学性质		
物质状态：固体	形状：连接器	
颜色：多色	气味：无味	
PH 值：未测定	沸点：未测定	
分解温度：未测定	爆炸介限：无	
自然温度：固体无	溶解度：固体无	
9. 安全性及反应性		
安全性：正常状态下安全		
特殊状况下可能之危害反应：无		
应避免之状况：避免接触火源和太阳光直照射		
应避免之物质：火和酸碱性物质		
危害分解物：无		
10. 毒性资料		
急毒性	吸人：无	
	皮肤接触：无	
	眼睛：无	
局部效应：无		特殊效应：无
11. 废弃物处理方法：废弃物可送到政府许可的废弃物处理中心进行处理		
12. 运送资料		
联合国编号：无		运输规定：并无危险分类
运送方法及注意事项：勿重压，轻拿轻放		
13. 适用法规：1.劳工安全卫生设施规划；2.危害物及有害物通讯规划；3.索尼环境通用规定；4 劳工用业环境空气中有害物容许溶度标准；5 道路交通安全规划		
14. 其他资料：		
15.法规资料		
适用法规	1.劳工安全卫生设施规则 2.RoHS 法规及有害物通识规则	
16.其它资料		
参考文献	有害化学物质中文资料库，环保局	
制表单位	浙江联和电子有限公司	
制造商及供应商地址	浙江省温州乐清市乐清湾港区创新路8号	
电话	0577-62383699	
制表者	陈浙海	
制表日期	2022-3-23	