浙 江 联 和 电 子 有 限 公 司

ZHEJIANG LIANHE ELECTRONICS CO.,LTD.

承　认　书

SPECIFCATION FOR APPROVAL

客 户 名 称 CUSTOMER	
品 名 DESCRIPTION	BH3.5型条形连接器
料 号 CUSERTOMER PART NO	C3501&C3502
日 期 DATE	

客 户 确 认（APPROVED SIGNATURES）

核准（APPROVAL）	工程（ENGINEERING）	品管（QC）
承认结果：	☐ 承认　☐ 不承认	☐ 重新送样

浙江联和电子有限公司
ZHEJIANG LIANHE ELECTRONICS CO.,LTD.
地址：浙江省乐清市乐清湾港区创新路
Address：Chuangxin Road,YueQing Bay Port Zone,Yueqing City,Zhejiang China 325600.
Tel：0577-62383668(销售)　0577-62383212(Sales)
Fax：0577-62382566
Web：lhecn.1688.com(中文) www.lhecn.net.cn(English)

目　　录

1. 封面(COVER) ……1

2. 目录(CATALOGUE)……2

3. 命名和图纸(NAMING AND DRAWING)……3-15

4. 规格书(SPECIFICATION)……16-19

5. 实验报告(TEST REPORT)……20-23

6. 认证(CERTIFICATION)……24-31

7. PA66 RoHS报告(PA66 RoHS REPORT)……32-42

8. PA66 卤素报告(PA66 HALOGEN REPORT)……43-55

9. 端子RoHS报告(TERMINAL RoHS REPORT) ……56-62

10.MSDS ……63-73

11. 反馈与建议(FEEDBACK AND SUGGESTIONS)……74

核准（APPROVAL）	确认（CHECK）	制作（PREPARE）

BH3.5型料号说明 Description of item number

壳体料号说明 HOUSING

C 3501 - S H B 02 X2 - N* - * - ** - ** - ** - **

A: Wire to Board Connectors
B: Board-in Connectors
C: Wire to Wire Connectors
D: Hard Splices Connectors
F: FFC/FPC Connectors
I : IDC

系列号 Series Number

特征类别(默认空)
Feature Category: S=锁片型

产品类别 H=壳体 Housing
P=密封件 Water Proofing
Product Category: F=配件 Fitting

同类别多型号序号 (默认空)
Same Series Different Type: B~ZZ

单列极数 The Pin Number of Single Row: 01~**

多列列数 The Pin Number of Several Row: X2~X* (无则空)

M为堵孔，*为堵孔序号(例M1.2.5)(无则空)

壳体材料
Housing Material:
1=PA66
2=PA66灼热丝-G
3=PA46
4=PA6T
5=PA9T
6=PBT
7=PPO
8=LCP
9=U=UL
10=PC
11=PA66无卤灼热丝
12=PA66高灼热丝B
13=PA66增强

壳体材料特性
Housing Material Specialty:
V2 UL阻燃等级标准(默认不注明)
V0 UL阻燃等级标准
Z=灼热丝是按照(IEC60695/GB/T5169)标准,
符合GWIT750℃,GWFI960℃
ZG=灼热丝加玻纤

壳体颜色
Housing Color:
OR=橙色 Orange
P=粉色 Pink
R=红色 Red
VI=紫色 Violet
Y=黄色 Yellow
GY=灰色 Gray
BK=黑色 Black
G=绿色 Green
BL=蓝色 Blue
BR=棕色 Brown
TR=透明白 Transparent
W=白色 White
EC=米白 ECRU
TG=透明绿 Transparent Green
壳体材料2/3/4/5/8/12默认米色
壳体材料7默认黑色
壳体材料1/6/9/10/11默认白色
壳体材料13默认透明
(默认可为空)

无卤标识
无卤产品加HF,有卤默认为空

客户专用代码
Customer Special Code: 表示和常规件不同,用来代表某个客户

备注:*部分内容只在产品标签中体现! 其他特殊要求位置不固定

BH3.5型料号说明 Description of item number

端子料号说明 TERMINAL

C 3501 N - T 2 2 A 30 5 P 2(*) Y - 1 - *(*) *

A: Wire to Board Connectors
B: Board-in Connectors
C: Wire to Wire Connectors
F: FFC/FPC Connectors
I : IDC
D: Chain Terminals and Splices

系列号 Series Number

特征类别(默认空) Feature Category:
K=直形带锁 N=直形
Z=旗形带锁 Q=旗形
X=横插带锁 H=横插
Y=叉形端子 J=插 片
R=环形端子 C=圆形
G=接线端子
W=鲨鱼齿端子
B=子弹形端子
U=耳扒形端子

产品类别 Product Category: T=端子 Terminal

同类别多型号序号 (默认空)
Same Series Different Type: 1~9

同型号多尺寸序号 (默认空)
Same Type Different size: 1~9

适用线规(默认空) Applicable Wire: A=小脚 B=中脚 C=高脚 D=大脚

料带厚度单位: mm X100 (0.3X100=30 默认空)

配合厚度单位: mm X10 (0.5X10=5 默认空)
注: 所有<灰色>说明, 为D系列分类附加料号及说明!

材质 Material:
Z=紫铜 Copper
S=不锈钢 Stainless Steel
P=磷青铜 Phos.Bronze
B=黄铜 Brass

表面处理 Surface processing:
0=素材酸洗 None
1=镀镍 Nickel Plating
2=镀亮锡 Tin Plating
3=镀镍氩光锡 Matt Tin-Nickel Plating
4=镀铅锡 Tin-Lead Plating
5=镀铜锡 Tin-Cu Plating
6=镀镍银 Silver-Nickel Plating
7=镀镍金 Gold-Nickel Plating
8=镀镍局部金 Nickel-Gold
9=镀亮锡局部金 Half Gold-Tin Plating
10=镀镍亮锡 Tin-Nickel Plating

镀层厚度(默认为空)

包装说明: Y=有字、N=无字

包装方式: 0=散装(袋装)、1=盘装、4=八角盘装、5=编带装 (常规默认为空)

包装数量: -**K: 客户定制数量,默认数量为空

客户专用代码
Customer Special Code: 表示和常规件不同,用来代表某个客户

其他说明: 如(U)=UL、软、低铅等

备注:表面处理内容只在产品标签中体现! 其他特殊要求位置不固定

其它料号说明 OTHER

P 0001 - B

P: Other Types

产品序号 Product Number

同型号序号 Same Series Different Type: B~Z
(默认空)

BH3.5型连接器承认图面

REV	DESCRIPTION	DATE
A/0	原始版本	E
A/1	修订版本	

安装尺寸Mounting Measurement

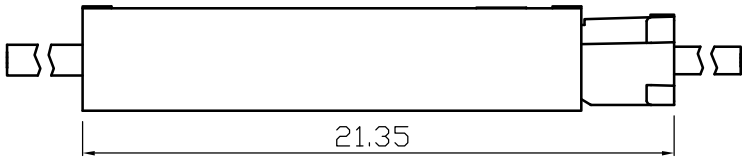

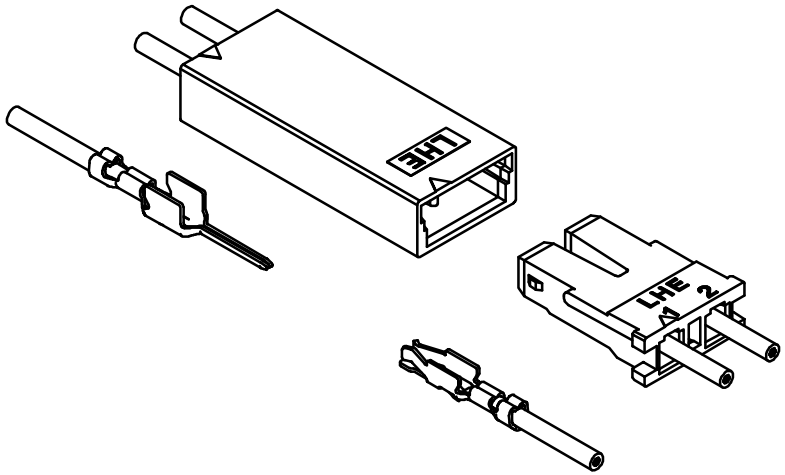

序号	图号	名称	材料	数量	附注

未注公差				LHE® 浙江联和电子有限公司 ZHEJIANG LIANHE ELECTRONICS CO.,LTD					
X.° ±3° X.X° ±0.5°									
>0-3	>3-18	>18-50	>50-120	单位	比例	Design Units	SIZE	页码	
±0.12	±0.15	±0.3	±0.5	MM Only	——	METRIC	A4		
制作	审核	批准		材料	图号			Part No	
				见图解	品名	BH3.5			

旧底图总号
底图总号
签字
日期

BH3.5型连接器承认图面

REV	DESCRIPTION	DATE
A/0	原始版本	E
A/1	修订版本	

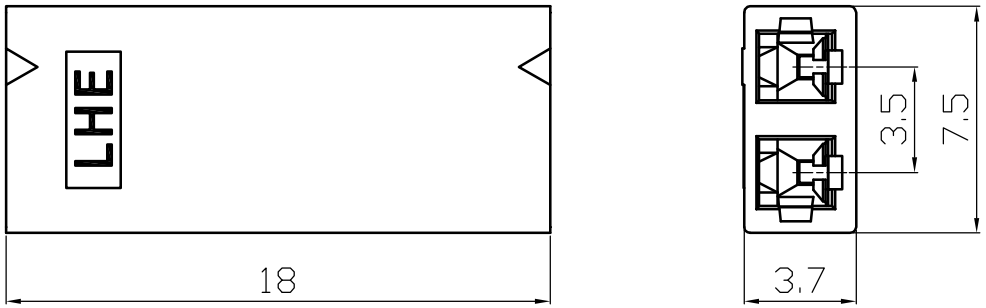

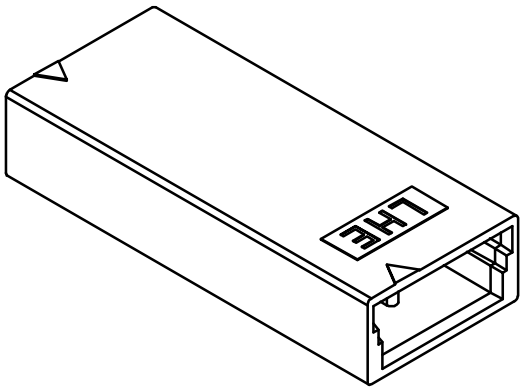

序号	料号	名称	材料	数量	附注
1	C3501-H02	Housing 胶壳	PA66(UL94V-0)	1	White（白色）

未注公差

X.° ±3° X.X° ±0.5°

LHE® 浙江联和电子有限公司
ZHEJIANG LIANHE ELECTRONICS CO.,LTD

>0-3	>3-18	>18-50	>50-120	单位	比例	Design Units	SIZE	页码
±0.12	±0.15	±0.3	±0.5	MM Only	——	METRIC	A4	

制作	审核	批准	材料	图号		Part No
			见图解	品名	BH3.5-2A	

旧底图总号

底图总号

签字

日期

BH3.5型连接器承认图面

REV	DESCRIPTION	DATE
A/0	原始版本	E
A/1	修订版本	

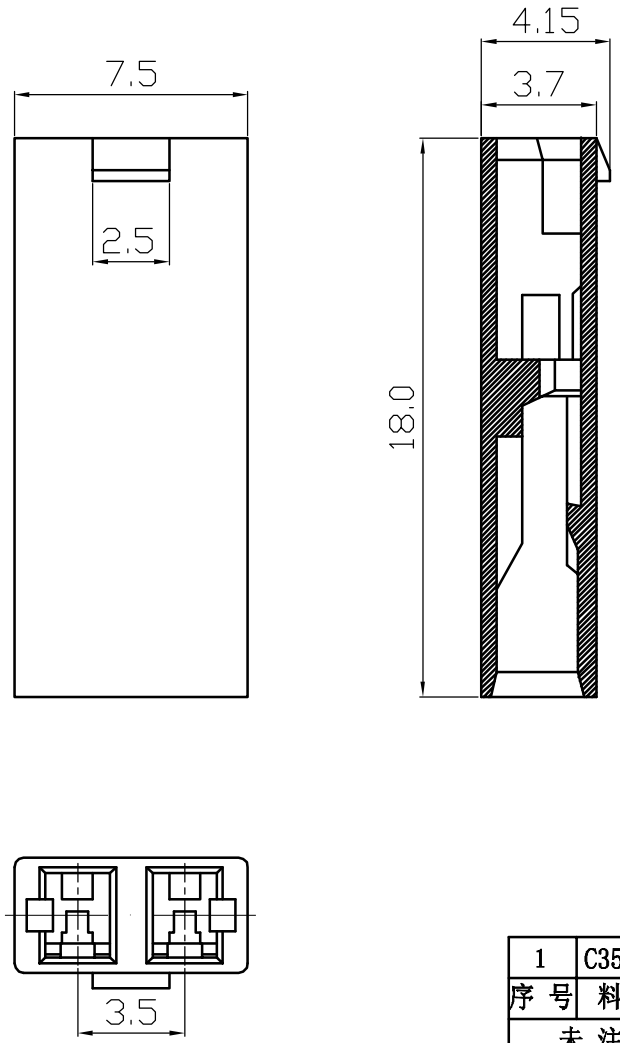

序号	料号	名称	材料	数量	附注
1	C3501-HB02	Housing 胶壳	PA66(UL94V-0)	1	White（白色）

未注公差

X.° ±3° X.X° ±0.5°

LHE® 浙江联和电子有限公司
ZHEJIANG LIANHE ELECTRONICS CO.,LTD

>0-3	>3-18	>18-50	>50-120	单位	比例	Design Units	SIZE	页码
±0.12	±0.15	±0.3	±0.5	MM Only	——	METRIC	A4	

制作	审核	批准	材料	图号		Part No	
			见图解	品名	BHS3.5-2A-80		

旧底图总号

底图总号

签字

日期

BH3.5端子承认图面

REV	SYM	REVISION RECORD	DR.	APPR.	DATE
A/0		原 始 版 本			A/0
A/1	①	取消端子表面处理说明	YF		20220413
A/2	②	高低温环境测试从85℃,更新到105℃	YF		20221026

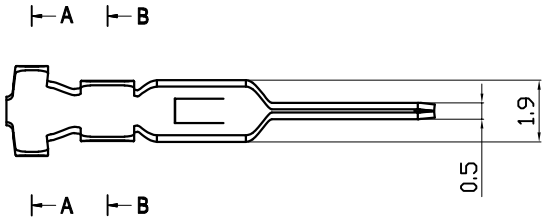

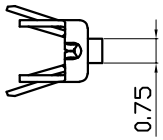

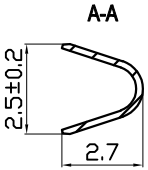

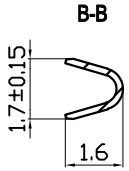

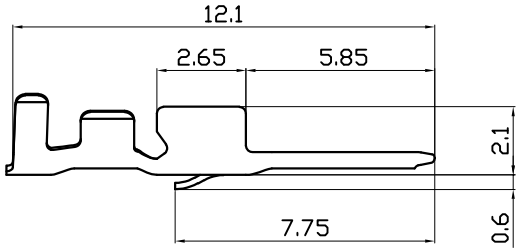

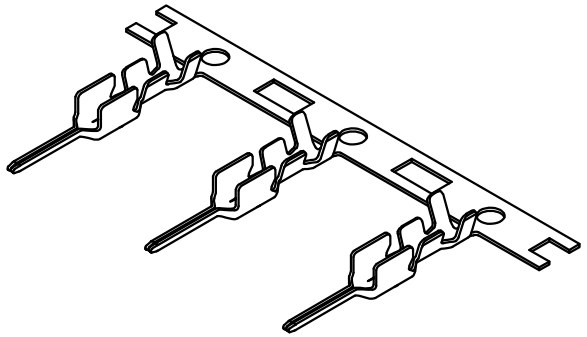

主要技术参数
Main Specifications

线数(poles):2P
额定电流(Current rating): 1.0A AC,DC
额定电压(Voltage rating): 1400V AC,DC
温度范围(Temperature range): -25℃ to +105℃ ②
接触电阻(Contact resistance): ≤10mΩ
绝缘电阻(Insulation resistance): ≥1000MΩ
耐电压(Withstand voltage):3800V AC/minute
适用线规(Applicable wire): AWG #28 to #24

Part No.		Material	Finish	Qty/reel
C3501-TP	BH3.5-AT11	Phosphor Bronze	TIN	8000pcs

未 注 公 差
X.° ±3° X.X° ±0.5°

LHE® 浙江联和电子有限公司
ZHEJIANG LIANHE ELECTRONICS CO.,LTD

>0-3	>3-18	>18-50	>50-120	单位	比例	Design Units	SIZE	页码
±0.12	±0.15	±0.3	±0.5	MM Only	——	METRIC	A4	

制 作	审 核	批 准	材 料	图 号		Part No
			见图解	品 名	BH3.5-AT	

旧底图总号
底图总号
签 字
日 期

BH3.5型连接器承认图面

REV	DESCRIPTION	DATE
A/0	原始版本	E
A/1	修订版本	

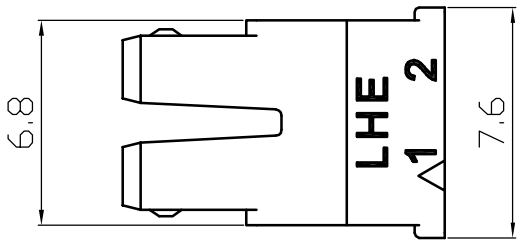

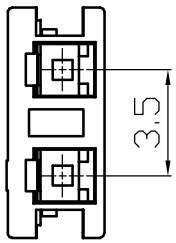

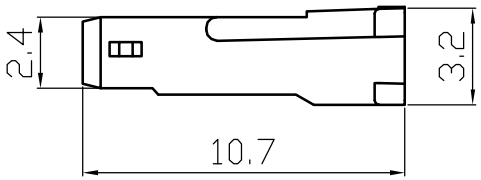

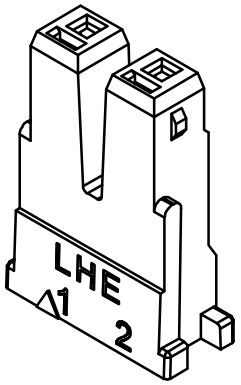

序号	料号	名称	材料	数量	附注
1	C3502-H02	Housing 胶壳	PA66(UL94V-0)	1	White（白色）

未注公差

X.° ±3° X.X° ±0.5°

LHE® 浙江联和电子有限公司
ZHEJIANG LIANHE ELECTRONICS CO.,LTD

>0-3	>3-18	>18-50	>50-120	单位	比例	Design Units	SIZE	页码
±0.12	±0.15	±0.3	±0.5	MM Only	——	METRIC	A4	

制作	审核	批准	材料	图号		Part No
			见图解	品名	BH3.5-2Y	

旧底图总号

底图总号

签字

日期

BH3.5型连接器承认图面

REV	DESCRIPTION	DATE
A/0	原始版本	E
A/1	修订版本	

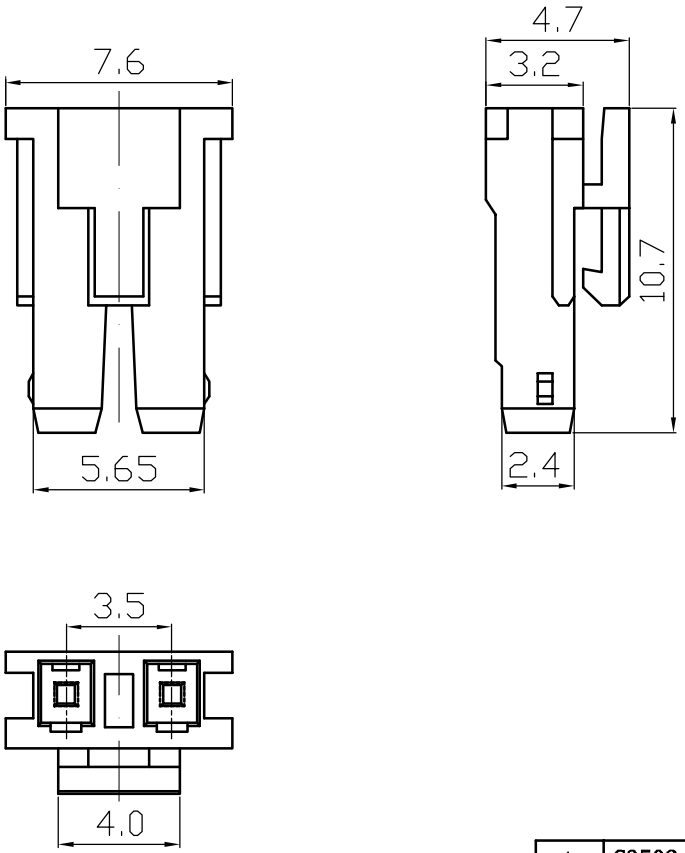

序号	料号	名称	材料	数量	附注
1	C3502-HB02	Housing 胶壳	PA66(UL94V-0)	1	White（白色）

未注公差

X.° ±3° X.X° ±0.5°

LHE® 浙江联和电子有限公司
ZHEJIANG LIANHE ELECTRONICS CO.,LTD

>0-3	>3-18	>18-50	>50-120	单位	比例	Design Units	SIZE	页码
±0.12	±0.15	±0.3	±0.5	MM Only	——	METRIC	A4	

制作	审核	批准	材料	图号		Part No
			见图解	品名	BHS3.5-2Y-80	

旧底图总号

底图总号

签字

日期

BH3.5端子承认图面

REV	SYM	REVISION RECORD	DR.	APPR.	DATE
A/0		原 始 版 本			A/0
A/1	①	取消端子表面处理说明	YF		20220413
A/2	②	高低温环境测试从85℃,更新到105℃	YF		20221026

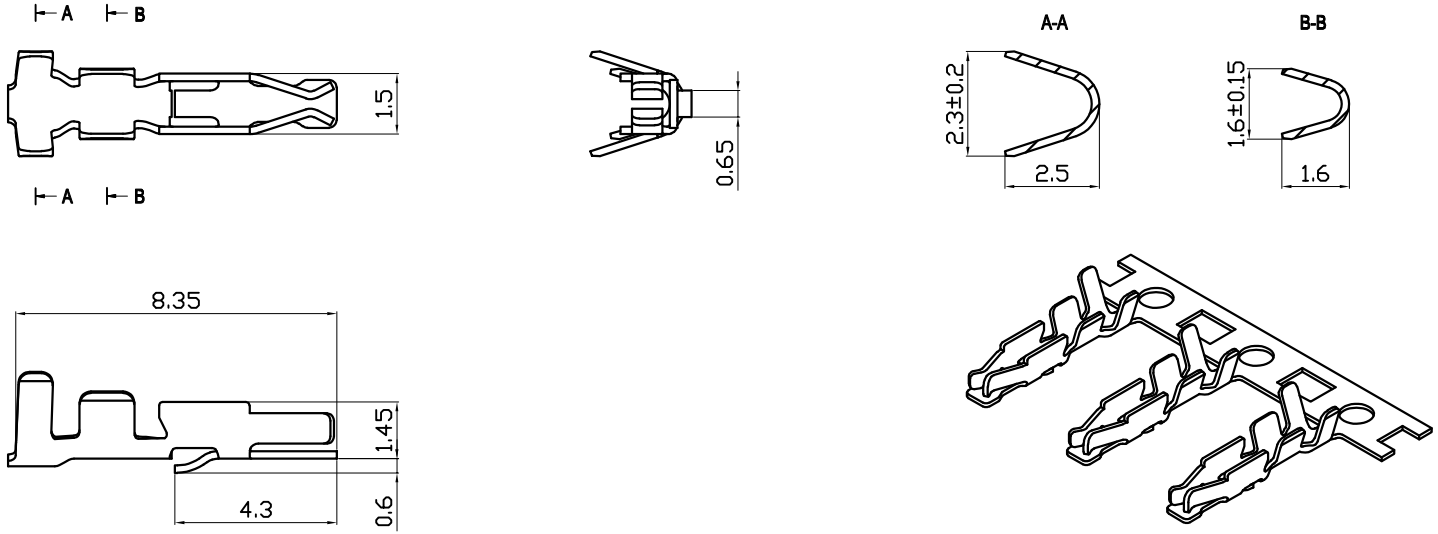

主要技术参数
Main Specifications

线数(poles):2P
额定电流(Current rating): 1.0A AC,DC
额定电压(Voltage rating): 1400V AC,DC
温度范围(Temperature range): -25℃ to +105℃ ②
接触电阻(Contact resistance): ≤10mΩ
绝缘电阻(Insulation resistance): ≥1000MΩ
耐电压(Withstand voltage):3800V AC/minute
适用线规(Applicable wire): AWG #28 to #24

Part No.		Material	Finish	Qty/reel
C3502-TP	BH3.5-YT11	Phosphor Bronze	TIN	10000pcs

未 注 公 差
X.° ±3° X.X° ±0.5°

LHE® 浙江联和电子有限公司
ZHEJIANG LIANHE ELECTRONICS CO.,LTD

>0-3	>3-18	>18-50	>50-120	单位	比例	Design Units	SIZE	页码
±0.12	±0.15	±0.3	±0.5	MM Only	——	METRIC	A4	

制 作	审 核	批 准	材 料	图 号		Part No
			见图解	品 名	BH3.5-YT	

旧底图总号
底图总号
签 字
日 期

BH3.5型连接器承认图面

REV	DESCRIPTION	DATE
A/0	原始版本	E
A/1	修订版本	

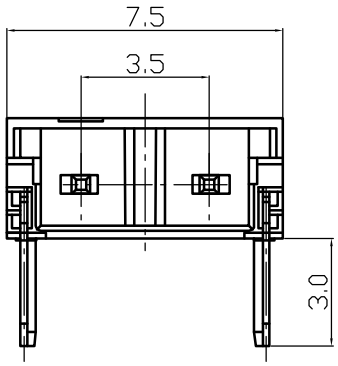

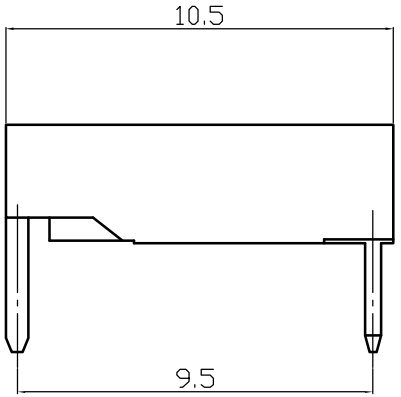

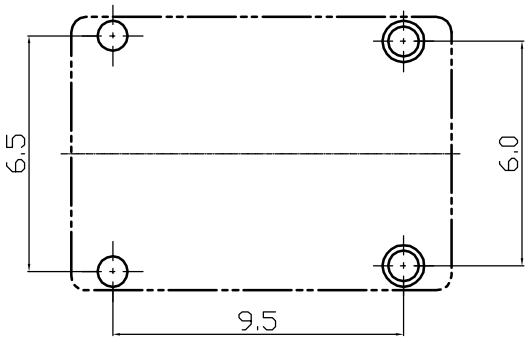

P.C.B LAYOUT

序号	料号	名称	材料	数量	附注
2	A3501-WRD02	针脚	Phos Bronze tin 磷青铜镀锡	4	
1		基座	PA9T(UL94V-0)	1	

未注公差

X.° ±3° X.X° ±0.5°

LHE® 浙江联和电子有限公司
ZHEJIANG LIANHE ELECTRONICS CO.,LTD

>0-3	>3-18	>18-50	>50-120	单位	比例	Design Units	SIZE	页码
±0.12	±0.15	±0.3	±0.5	MM Only	——	METRIC	A4	

制作	审核	批准	材料	图号		Part No
			见图解	品名	BH3.5-2AW-80	

旧底图总号

底图总号

签字

日期

BH3.5型连接器承认图面

REV	DESCRIPTION	DATE
A/0	原始版本	E
A/1	修订版本	

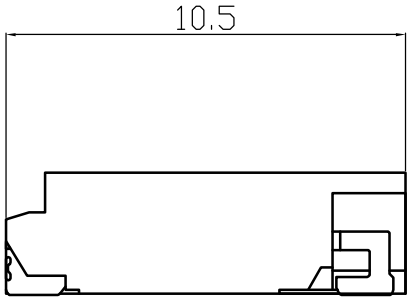

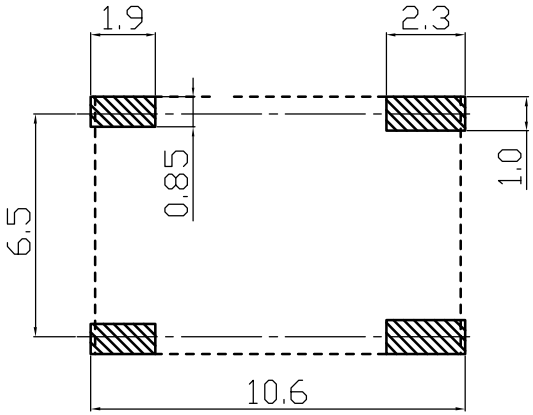

P.C.B LAYOUT

序号	料号	名称	材料	数量	附注
3	A3501-SR02	焊片	Phos Bronze tin 磷青铜镀锡	2	
2		针脚	Phos Bronze tin 磷青铜镀锡	2	
1		基座	PA9T(UL94V-0)	1	

未注公差

X.° ±3° X.X° ±0.5°

>0-3	>3-18	>18-50	>50-120
±0.12	±0.15	±0.3	±0.5

LHE® 浙江联和电子有限公司
ZHEJIANG LIANHE ELECTRONICS CO.,LTD

单位	比例	Design Units	SIZE	页码
MM Only	——	METRIC	A4	

制作	审核	批准	材料	图号	Part No
			见图解	品名	BH3.5-2AWB-80

旧底图总号

底图总号

签字

日期

BH3.5型连接器承认图面

REV	DESCRIPTION	DATE
A/0	原始版本	E
A/1	修订版本	

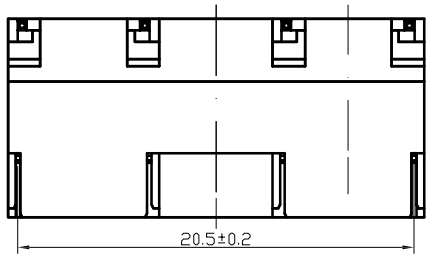

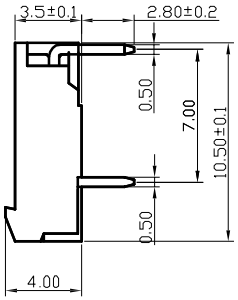

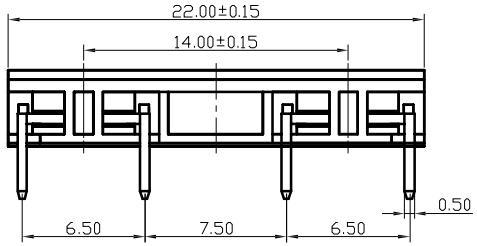

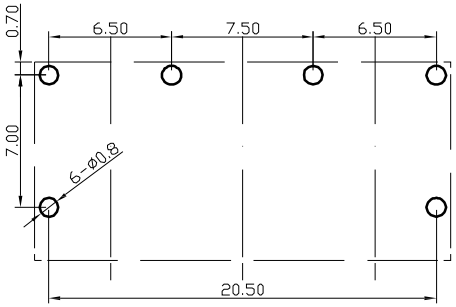

P.C.B LAYOUT

序号	料号	名称	材料	数量	附注
2	A3501-WRD04	针脚	Phos Bronze tin 磷青铜镀锡	6	
1		基座	PA9T(UL94V-0)	1	

未注公差

X.° ±3° X.X° ±0.5°

>0-3	>3-18	>18-50	>50-120
±0.12	±0.15	±0.3	±0.5

LHE® 浙江联和电子有限公司
ZHEJIANG LIANHE ELECTRONICS CO.,LTD

单位	比例	Design Units	SIZE	页码
MM Only	——	METRIC	A4	

制作	审核	批准	材料	图号	Part No
			见图解	品名	BHSD3.5-4AW-80

旧底图总号

底图总号

签字

日期

BH3.5型连接器承认图面

REV	DESCRIPTION	DATE
A/0	原始版本	E
A/1	修订版本	

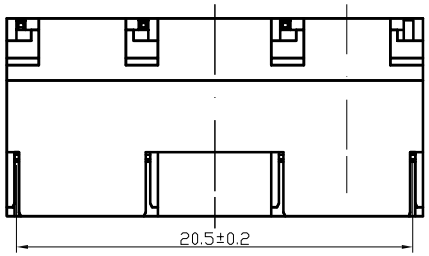

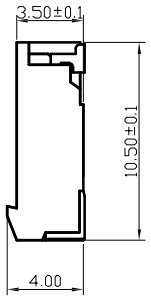

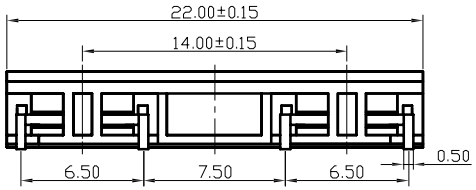

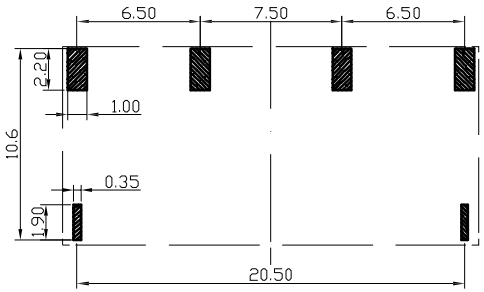

P.C.B LAYOUT

序号	料号	名称	材料	数量	附注
3	A3501-SR04	焊片	Phos Bronze tin 磷青铜镀锡	2	
2		针脚	Phos Bronze tin 磷青铜镀锡	4	
1		基座	PA9T(UL94V-0)	1	

未注公差

X.° ±3° X.X° ±0.5°

LHE® 浙江联和电子有限公司
ZHEJIANG LIANHE ELECTRONICS CO.,LTD

>0-3	>3-18	>18-50	>50-120	单位	比例	Design Units	SIZE	页码
±0.12	±0.15	±0.3	±0.5	MM Only	——	METRIC	A4	

制作	审核	批准	材料	图号		Part No
			见图解	品名	BHSD3.5-4AWB-80	

旧底图总号

底图总号

签字

日期

产品规格书

PRODUCT SPECIFICAION

版本号
Version Number: B

产品编码
Part Number: C3501&C3502

■ 规格 Specifications

◆1、极数 Poles: 2P
◆2、额定电流 Current rating: 1.0A AC,DC
◆3、额定电压 Voltage rating: 1400V AC,DC
◆4、温度范围 Temperature range: -25℃ to +105℃
◆5、接触电阻 Contact resistance: ≤10mΩ
◆6、绝缘电阻 Insulation resistance: ≥1000MΩ
◆7、耐电压 Withstand voltage: 3800V AC/minute
◆8、适用线规 Applicable wire: AWG #28 to #24

产品性能测试 Performance test			
	项目 Item	测试条件 Test Condition	规格要求 Requirement
1	外观 Appearance	目测 Visual by eye 视力 Light: ＞1.0 照明 Lamp: 200～300Lx 目测距离 Space: 0.3～0.5m	1.塑料件表面应无明显疤痕、凹陷、开裂及影响使用的变形。 Plastic part:smooth and flat surface without discolor,broken,crack distortion defects is acceptable. 2.金属件表面无锈蚀、氧化、无明显的机械损伤等缺陷。 Metal part:btight and even surface without rust,oxide,fog and obvious physical damage defects is acceptable. 3.导线表面清洁、无破损等缺陷，印字及标志清晰。 Wire:clearing surface without discolor,broken defects,indistinct words and mark is acceptable.
2	接触电阻 Contact Resistance	插合连接器,用小功率电路进行测试。 Mate connectors,measure by dry circuit.	10mΩ MAX
3	绝缘电阻 Insulation Resistance	在相邻接触件之间或地线之间，用500V DC电压进行测试。 Apply 500V DC between adjacent terminal or ground.	1000MΩ MIN
4	耐电压 Dielectric Strength	相邻接触件之间或地线之间施加50Hz 3800V AC(有效值),漏电流1mA的电压作用，时间1min。 Mate connectors, apply 3800V AC for 1 minute between adjacent terminal or ground.	无击穿和飞弧现象 No Breakdown

产品规格书

PRODUCT SPECIFICAION

版本号
Version Number: B

产品编码
Part Number: C3501&C3502

产品性能测试 Performance test				
	项目 Item	测试条件 Test Condition	规格要求 Requirement	
5	压着部位抗张强度 Crimping Pull Out Force	在试验装置夹头中固定测试样品，在连接的轴线方向施加张力;速度不大于25mm/min。 Fix the crimped terminal,apply axial pull out force on the wire at the speed rate of not more 25mm/min.	AWG.24#	20N MIN
			AWG.26#	15N MIN
			AWG.28#	10N MIN
6	壳体/端子固定力 Terminal/Housing Retention Force	固定连接器或测力计，在连接器轴线方向施加规定的拉力;速度不大于25mm/min。 Apply axial pull out force at the speed rate of not more 25mm/min on the pin assembled in the housing.	20N MIN	
7	针的固定力 Pin Retention Force	固定连接器或测力计，在连接器轴线方向对针施加规定的推力;速度不大于25mm/min。 Apply axial push out force at the speed rate of not more 25mm/minute on the terminal assembled in the base.	20N MIN	
8	可焊性 Solderability	把测试样品需要焊接的部位浸入焊锡炉中(锡炉温度235℃±5℃)2～3秒钟。 Soldering time: 2～3 second Solder Temperature:235℃±5℃	上锡率≥90% 90% of immersed area must show no voids,pin holes	
9	耐焊接热 Resistance to Soldering Heat	把测试样品需要焊接的部位浸入焊锡炉中(锡炉温度260℃±5℃)；4～6秒钟后在正常的条件下恢复1小时。 Soldering time: 4～6 second Solder Temperature:260℃±5℃	外观 Appearance	无损伤 No Damage
10	耐高温 Heat Resistance	连接器配合后，于105℃±2℃的空气中放置96小时，然后再回到室温中放置1～2h小时测定 Mated connectors are exposed to a temperature of 105℃±2℃ for 96 hours.	外观 Appearance 接触电阻 LLCR	无损伤 No Damage 20mΩ Max
11	耐低温 Clod Resistance	连接器配合后，于-25℃±2℃的空气中放置96小时，然后再回到室温中放置1～2h小时测定 Mated connectors are exposed to a temperature of -25℃±2℃for 96 hours.	外观 Appearance 接触电阻 LLCR	无损伤 No Damage 20mΩ Max
12	温度上升 Temperature Rise	插合连接器,通以最大允许电流。 Carring rated current load.	温度最大上升 Temperature Rise	60℃ MAX

产品规格书

PRODUCT SPECIFICAION

版本号
Version Number: B

产品编码
Part Number: C3501&C3502

产品性能测试 Performance test				
	项目 Item	测试条件 Test Condition	规格要求 Requirement	
13	恒定湿热 Humidity	温度：40±2℃ 相对湿度：90%～95% 搁置时间：96小时，取出恢复2h后检查 Temperature: 40±2℃ Relative Humidity: 90%～95% Duration: 96 hours	外观 Appearance	无损伤 No Damage
			耐电压 Dielectric Strength	3800V,AC /minute
			绝缘电阻 Insulation Resistance	1000MΩ MIN
			接触电阻 LLCR	20mΩ MAX
14	温度循环 Temperature cycle	把测试样品放入高低温试验箱中,按下列步骤调试温度: a)在-25℃±2℃的恒温条件下放置0.5小时; b)在105℃±2℃的恒温条件下放置0.5小时; 从a)到b)为一个循环周期,共进行5个循环。恢复1h后检查。状态转换时间不多于1小时。 Mated connectors are exposed to 5 cycles of: a)-25℃±2℃ 0.5hour b)+105℃±2℃ 0.5hour	外观 Appearance	无损伤 No Damage
			耐电压 Dielectric Strength	3800V,AC /minute
			绝缘电阻 Insulation Resistance	1000MΩ MIN
			接触电阻 LLCR	20mΩ MAX
15	机械振动 Vibration	插合连接器，串联在一直流电源上，电流100mA;并模拟正常工作状态,振频为10～55Hz、振幅1.5mm；55～500Hz、加速度50m/s^2,每一轴线扫频循环次数10次、2小时。 Frequency: 10～55Hz Amplitude: ±1.5mm Frequency: ＞55～500Hz Acceleration: 50m/s^2 Duration: 2 hours in each X,Y,Z axes	外观 Appearance	无损伤 No Damage
			接触电阻 Contact Resistance	20mΩ MAX
			中断 Intermittence	1μsec MAX
16	机械寿命 Repeated insertion/ withdrawal	以每分钟插拔10次的速率，插拔50次。 When mated up to 50 cycles repeatedly by the rate of 10 cycles per minute.	外观 Appearance	无损伤 No Damage
			耐电压 Dielectric Strength	3800V,AC /minute
			绝缘电阻 Insulation	1000MΩ MIN
			接触电阻 Contact Resistance	20mΩ MAX

产品规格书

PRODUCT SPECIFICAION

版本号
Version Number: B

产品编码
Part Number: C3501&C3502

产品性能测试 Performance test					
	项目 Item	测试条件 Test Condition	规格要求 Requirement		
17	盐雾 Salt Spray	把先冲后镀* 的测试样品从试验箱顶悬挂下来，采用浓度为5%±1(质量百分比)的氯化钠溶液，连续雾化24小时，试验后用流动的蒸馏水轻轻洗去表面沉积物。在常温常驻湿条件下恢复1～2小时。 24 hour exposure to a saltspray from the 5%±1 solution.	外观无损伤(五金件应无露出底金属的严重锈蚀；使用预镀的型材，其落料面允许有不影响其性能的轻微腐蚀。) Appearance:No Damage(No erosion with material exposed.And with plating material,slight erosion on the cutting surface acceptable)		
18	插入力与拔出力 Insertion and Withdrawal Force	相配的连接器以1mm/s～5mm/s的速度沿接插器轴线方向插入和拔出。 Insertion and withdraw connectors at the speed rate of 1mm/s～5mm/s.		插入力（最大值） Insertion (Max)	拔出力（最小值） Withdrawal (Min)
			SINGLE PIN	8N	0.5N

＊ 先冲后镀为定制端子。常规端子为先镀后冲，无法通过盐雾试验。

1	高低温环境测试从85℃，更新到105℃.更改电流	根据客户要求，进行统一的测试升级	20221026	玉夫
序号	变更记录	变更原因	变更时间	责任人
变更记录				

制订 Edit: YF　审核 Check: WZY　批准 Approval: CZH　日期 Date:

LHE 浙江联和电子有限公司

试 验 报 告

试验项目:插拔出力测试报告　　试验日期：2026.04.09

产品名称	BH3.5-2A/BH3.5-2Y/BH3.5-YT/BH3.5-AT	生产单位	注塑/压针/冲压
样品数量	5PCS	检验标准	产品规格书
检验设备	全自动插拔力机	测试环境	温度 23.5℃/温度 63%

标准要求		
	指标	插入力≤16N,拔出力≥1N
	试验条件	单个相配的接触件以1mm/s～5mm/s的速度沿接插器轴线方向插入和拔出。

试验结果

BH3.5-2A/BH3.5-2Y/BH3.5-YT/BH3.5-AT	1	2	3	4	5
插入力/N	9.3	9.45	9.21	9.31	9.41
拔出力/N	7.49	7.49	7.42	7.48	7.47
判定	OK	OK	OK	OK	OK

判定：合格

实验员：绿萝　　审核员：陈浙海

浙江联和电子有限公司 品质章

表单编号：QR/LHE-PZ-023　　版本：B/0

LHE 浙江联和电子有限公司

试 验 报 告

试验项目:针焰实验　　试验日期：2016/11/17

产品或零件名称	PA66　94V0 样条	生产单位	注塑
样品数量	各 3PCS	检验标准	GB/T5169.5-2008
检验设备	针焰实验箱	进货批号	/

标准要求	指标	a.试验样品无火焰和灼热，并且规定的铺底层或包装绢纸没有起燃 b.在移开针焰后，试验样品和周围的零部件的火焰或灼热在 30s 之内熄灭，即 tb＜30s,而且周围的零部件没有完全烧毁，以及规定的铺底层或包装绢纸没有起燃
	试验条件	施加试验火焰持续时间为 12s。火焰高度 12mm±1mm。
试验结果		 产品施焰时间 12s,续燃时间 2.6s。无滴落物。
判定		符合要求 实验员：唐安英　　审核员：熊英

表单编号：QR/LHE-PZ-019　　**版本：B/0**

浙江联和电子有限公司
盐雾试验报告

厂址：乐清市淡溪镇石埭山
电话：0577-61315822；FAX：0577-61315757

<table>
<tr><td colspan="3">试验日期：2016 年 10 月 16 日</td><td colspan="3">试验号码：201610168009</td></tr>
<tr><td colspan="3">试验方法：NSS</td><td colspan="3">试验标准：GB/T10125-1997</td></tr>
<tr><td colspan="6">客户名称：</td></tr>
<tr><td rowspan="3">试 样</td><td>品 名</td><td>金属端子</td><td rowspan="2">镀层厚度</td><td>Cu:1~2.5</td><td>μm</td></tr>
<tr><td>材 质</td><td>CuZn</td><td>Sn:3~5</td><td>3μm</td></tr>
<tr><td>试验前外观</td><td>银白色</td><td>数 量</td><td colspan="2">30 枚</td></tr>
<tr><td rowspan="5">试 验
条 件</td><td colspan="5">试验时间：16 日 16 时 至 17 日 8 时</td></tr>
<tr><td colspan="2">喷雾时间：16 小时</td><td colspan="3">保温时间：0 小时</td></tr>
<tr><td colspan="2">试验室温度：37±1℃</td><td colspan="3">压力桶温度：45±1℃</td></tr>
<tr><td colspan="2">试验室相对湿度：65%～75%</td><td colspan="3">大气压：101～102kpa</td></tr>
<tr><td colspan="2">NACL 浓度：5%±0. 5%</td><td colspan="3">PH 值：7.0（中性）</td></tr>
<tr><td rowspan="2">试 验
描 述</td><td>试验后外观</td><td colspan="4">合格</td></tr>
<tr><td>去除腐蚀
产物后外观</td><td colspan="4">正常</td></tr>
<tr><td>试 验
结 果</td><td colspan="5">合格</td></tr>
<tr><td>备 注</td><td colspan="5"></td></tr>
</table>

试验单位：浙江联和电子有限公司 试验员：李代辉 核准：林乐萍

ECBT2.E364711 - Connectors for Use in Data, Signal, Control and Power Applications - Component

Connectors for Use in Data, Signal, Control and Power Applications - Component

See General Information for Connectors for Use in Data, Signal, Control and Power Applications - Component

ZHEJIANG LIANHE ELECTRONIC CO LTD E364711
Chuangxin Road, YueQing Bay Port Zone
Yueqing, Zhejiang 325600 CHINA
Connector, Model(s) 1.58-LHE f/b 2 , f/b 1 thru 12, f/b A2 or AW., 1.58-LHE f/b 2 thru 6, f/b A2 or AW

Connector, Model(s) 1.58-LHE followed by 2, followed by 1 thru 12, followed by A(T).

Connector, Model(s) 1.58-LHE, f/b 2 thru 6 , f/b A(T)., 1.58-LHE, f/b 2 thru 6, f/b Y(T), 1.58-LHE, f/b 2, f/b 1 thru 12 , f/b Y(T)., 2510-LHE f/b 2 , f/b 1 thru 12, f/b A2 or AW, 2510-LHE f/b 2 thru 6, f/b A2 or AW

Connector, Model(s) 2510-LHE followed by 2, followed by 1 thru 12, followed by A(T)

Connector, Model(s) 2510-LHE, f/b 2 thru 6 , f/b A(T), 2510-LHE, f/b 2 thru 6, f/b Y(T), 2510-LHE, f/b 2, f/b 1 thru 12 , f/b Y(T), 5.08-LHE f/b 2 , f/b 1 thru 12, f/b A2 or AW, 5.08-LHE f/b 2 thru 6, f/b A2 or AW

Connector, Model(s) 5.08-LHE followed by 2, followed by 1 thru 12, followed by A(T)

Connector, Model(s) 5.08-LHE, f/b 2 thru 6 , f/b A(T), 5.08-LHE, f/b 2 thru 6, f/b Y(T), 5.08-LHE, f/b 2, f/b 1 thru 12 , f/b Y(T), 51005-LHE f/b 2 , f/b 1 thru 12, f/b A2 or AW, 51005-LHE f/b 2 thru 6, f/b A2 or AW

Connector, Model(s) 51005-LHE followed by 2, followed by 1 thru 12, followed by A(T)

Connector, Model(s) 51005-LHE, f/b 2 thru 6 , f/b A(T), 51005-LHE, f/b 2 thru 6, f/b Y(T), 51005-LHE, f/b 2, f/b 1 thru 12 , f/b Y (T), 51006-LHE f/b 2 , f/b 1 thru 12, f/b A2 or AW, 51006-LHE f/b 2 thru 6, f/b A2 or AW

Connector, Model(s) 51006-LHE followed by 2, followed by 1 thru 12, followed by A(T)

Connector, Model(s) 51006-LHE, f/b 2 thru 6 , f/b A(T), 51006-LHE, f/b 2 thru 6, f/b Y(T), 51006-LHE, f/b 2, f/b 1 thru 12 , f/b Y (T), 5102-LHE f/b 2 , f/b 1 thru 12, f/b A2 or AW, 5102-LHE f/b 2 thru 6, f/b A2 or AW

Connector, Model(s) 5102-LHE followed by 2, followed by 1 thru 12, followed by A(T)

Connector, Model(s) 5102-LHE, f/b 2 thru 6 , f/b A(T), 5102-LHE, f/b 2 thru 6, f/b Y(T), 5102-LHE, f/b 2, f/b 1 thru 12 , f/b Y(T), 5240-LHE f/b 2 , f/b 1 thru 12, f/b A2 or AW, 5240-LHE f/b 2 thru 6, f/b A2 or AW

Connector, Model(s) 5240-LHE followed by 2, followed by 1 thru 12, followed by A(T)

Connector, Model(s) 5240-LHE, f/b 2 thru 6 , f/b A(T), 5240-LHE, f/b 2 thru 6, f/b Y(T), 5240-LHE, f/b 2, f/b 1 thru 12 , f/b Y(T), 5500-LHE f/b 2 , f/b 1 thru 12, f/b A2 or AW, 5500-LHE f/b 2 thru 6, f/b A2 or AW

Connector, Model(s) 5500-LHE followed by 2, followed by 1 thru 12, followed by A(T)

Connector, Model(s) 5500-LHE, f/b 2 thru 6 , f/b A(T), 5500-LHE, f/b 2 thru 6, f/b Y(T), 5500-LHE, f/b 2, f/b 1 thru 12 , f/b Y(T), 5557 followed by 2 thru 6, followed by A(T), 5557 followed by 2 thru 6, followed by A2 or AW, 5557 followed by 2 thru 6, followed by Y(T)

Connector, Model(s) 5557 followed by 2, followed by 1 thru 12, followed by A(T).

Connector, Model(s) 5557 followed by 2, followed by 1 thru 12, followed by A2 or AW

Connector, Model(s) 5557 followed by 2, followed by 1 thru 12, followed by Y(T)

Connector, Model(s) 5559-LHE f/b 2 , f/b 1 thru 12, f/b A2 or AW, 5559-LHE f/b 2 thru 6, f/b A2 or AW

Connector, Model(s) 5559-LHE followed by 2, followed by 1 thru 12, followed by A(T).

Connector, Model(s) 5559-LHE, f/b 2 thru 6 , f/b A(T), 5559-LHE, f/b 2 thru 6, f/b Y(T), 5559-LHE, f/b 2, f/b 1 thru 12 , f/b Y(T), 5566-LHE f/b 2 , f/b 1 thru 12, f/b A2 or AW, 5566-LHE f/b 2 thru 6, f/b A2 or AW

Connector, Model(s) 5566-LHE followed by 2, followed by 1 thru 12, followed by A(T)

Connector, Model(s) 5566-LHE, f/b 2 thru 6 , f/b A(T), 5566-LHE, f/b 2 thru 6, f/b Y(T), 5566-LHE, f/b 2, f/b 1 thru 12 , f/b Y(T), 5569-LHE f/b 2 , f/b 1 thru 12, f/b A2 or AW, 5569-LHE f/b 2 thru 6, f/b A2 or AW

Connector, Model(s) 5569-LHE followed by 2, followed by 1 thru 12, followed by A(T)

Connector, Model(s) 5569-LHE, f/b 2 thru 6 , f/b A(T), 5569-LHE, f/b 2 thru 6, f/b Y(T), 5569-LHE, f/b 2, f/b 1 thru 12 , f/b Y(T), 5600-LHE f/b 2 , f/b 1 thru 12, f/b A2 or AW, 5600-LHE f/b 2 thru 6, f/b A2 or AW

Connector, Model(s) 5600-LHE followed by 2, followed by 1 thru 12, followed by A(T)

Connector, Model(s) 5600-LHE, f/b 2 thru 6 , f/b A(T), 5600-LHE, f/b 2 thru 6, f/b Y(T), 5600-LHE, f/b 2, f/b 1 thru 12 , f/b Y(T), 63080-LHE f/b 2 , f/b 1 thru 12, f/b A2 or AW, 63080-LHE f/b 2 thru 6, f/b A2 or AW

Connector, Model(s) 63080-LHE followed by 2, followed by 1 thru 12, followed by A(T)

Connector, Model(s) 63080-LHE, f/b 2 thru 6 , f/b A(T), 63080-LHE, f/b 2 thru 6, f/b Y(T), 63080-LHE, f/b 2, f/b 1 thru 12 , f/b Y (T), B2502 followed by 2 thru 16, followed by Y(T), BH3.5-2A(T), BH3.5-2Y(T), MX3.0 followed by 2 thru 12, followed by A(T), MX3.0 followed by 2 thru 12, followed by A2 or AW, MX3.0 followed by 2 thru 12, followed by Y(T)

Connector, Model(s) MX3.0 followed by 2, followed by 1 thru 12, followed by A(T).

Connector, Model(s) MX3.0 followed by 2, followed by 1 thru 12, followed by A2 or AW

Connector, Model(s) MX3.0 followed by 2, followed by 1 thru 12, followed by Y(T)

Connector, Model(s) PA-LHE f/b 2, f/b 1 thru 12, f/b Y(T), PA-LHE followed by 2 thru 12, followed by A(T)

Connector, Model(s) PA-LHE followed by 2 thru 12, followed by A2 or AW

Connector, Model(s) PA-LHE followed by 2 thru 12, followed by Y(T)

Connector, Model(s) PA-LHE followed by 2, followed by 1 thru 12, followed by A(T)

Connector, Model(s) PA-LHE followed by 2, followed by 1 thru 12, followed by A2 or AW

Connector, Model(s) PH, PHB, XHB, JC25, SCN followed by -2 thru -20, followed by Y(T), A, AW or AWD

Connector, Model(s) PHB followed by 2 thru 16, followed by Y(T). followed by 2 thru 16, followed by AWD, A, AW

Connector, Model(s) Series 1.25, 1254, 1255 followed by -2 thru -25, followed by Y(T), A or AW

Connector, Model(s) Series 5264 followed by -2 thru -16, followed by Y(T), A or AWD

Connector, Model(s) SM followed by -2 thru -18, followed by Y(T) or A(T)

Connector, Model(s) VH, 3.96 followed by -2 thru -16, followed by Y(T), A, AW or AWG

Connector, Model(s) XA-LHE f/b 2, f/b 1 thru 12, f/b Y(T), XA-LHE followed by 2 thru 12, followed by A(T)

Connector, Model(s) XA-LHE followed by 2 thru 12, followed by A2 or AW

Connector, Model(s) XA-LHE followed by 2 thru 12, followed by Y(T)

Connector, Model(s) XA-LHE followed by 2, followed by 1 thru 12, followed by A(T)

Connector, Model(s) XA-LHE followed by 2, followed by 1 thru 12, followed by A2 or AW

Connector, Model(s) XH followed by -2 thru -20, followed by Y(T), A, AW, AWGD, AWD or AWGDJ

Connector, Model(s) ZH followed by 2 thru 16, followed by AWD or A, ZH followed by 2 thru 16, followed by Y(T).

Model(s) 1.25, followed by -2 thru -16, followed by AB or AWB

Model(s) 51146 or FI-S, followed by -2 thru -16, followed by AB or AWB

Model(s) A5001, followed by -2 thru -7, followed by Y, Y(T), AD or AWD

Model(s) B2501-LHE, A2004-LHE, A4203-LHE, PHR-LHE, PHD-LHE, CH2.5-LHE, DF11-LHE, PHSD-LHE, A5001-LHE, 35155-LHE, 35156-LHE, 5195-LHE, 5196-LHE, followed by 2 thru 16, followed by Y(T)

Model(s) BHS-LHE, SMH250-LHE, SMH200-LHE, L6.2-LHE, 1806-LHE, 2060-LHE, 2541-LHE, JC15-LHE, XHD-LHE, followed by -2, followed by A(T), or Y(T)

Model(s) JWPF-LHE, B2541-LHE, NV-LHE, DV-LHE, SGN-LHE, SJN-LHE, SDN-LHE, SIN-LHE, 35150-LHE, 35151-LHE, 35180-LHE, 35182-LHE, 35524-LHE, 35965-LHE, RCY-LHE, LC-LHE, VR-LHE, SHJ-LHE, SHL-LHE, DF19-LHE, ACH-LHE, DF13-LHE, IL-Z-LHE, 51146-LHE, SATA-LHE, XSR-LHE, SUR-LHE, SUH-LHE, ZE-LHE, ZND-LHE, ZPD-LHE, A1502-LHE, SFH-LHE,51004-LHE, PUD-LHE, A20010-LHE, 35507-LHE, DF3-LHE, PND-LHE, RE-LHE,RA-LHE, RF-LHE or A3963, followed by -2 thru -15, followed by Y(T), YB(T) or YC(T), A, A-K, AW, AW-K, AD, AD-K, AWGD, AWGD-K, AQ, AQ-K, AWQ, AWQ-K, AD(BH) or AD(BH)-K.

Model(s) PH, followed by -2 thru -16, followed by AB or AWB

Model(s) PHB, SZN-LHE, SAN-LHE, JC20-LHE, EH-LHE, EI-LHE, EL-LHE, S-EL-LHE, followed by 2 thru 16, followed by AWD, A, AW

Model(s) PHB, SZN-LHE, SAN-LHE, JC20-LHE, EH-LHE, EI-LHE, EL-LHE, S-EL-LHE, followed by 2 thru 16, followed by Y(T)

Model(s) PHB, XH, XHB or XHBD, followed by -2 thru -16, followed by AB or AWB.

Model(s) RAST 5-LHE TAB HEADER ASSY , TH, Vertical, Cat. Nos. 1969738-LHE,1969740-LHE, 1971845-LHE, 1971846-LHE, 1971895-LHE, 1971896-LHE, 1971946-LHE thru 1971949-LHE, 1971954-LHE thru 1971957-LHE, 2232008-LHE thru 2232011-LHE, 2232000-LHE thru 2232003-LHE, 2232016-LHE thru 2232019-LHE, 1971962-LHE thru 1971965-LHE, 2232024-LHE thru 2232027-LHE, 2232289-LHE thru 2232292-LHE, 2232043-LHE thru 2232074-LHE, 2232298-LHE thru 2232301-LHE, 2232511-LHE, 2232532-LHE, 2232557-LHE, 2232559-LHE, 2232560-LHE, 2232562-LHE, 2232563-LHE, 2232565-LHE, 2232566-LHE, 2232568-LHE, 2232569-LHE, 2232571-LHE, 2232572-LHE, 2232574-LHE, 2232575-LHE, 2232577-LHE, 2232578-LHE, 2232580-LHE, 2232581-LHE, 2232583-LHE, 2232584-LHE, 2232586-LHE, 2232587-LHE, 2232589-LHE, 2232590-LHE, 2232592-LHE, 2232593-LHE, 2232595-LHE, 2232596-LHE, 2232598-LHE, 2232599-LHE, 2232601-LHE, 2232602-LHE, 2232604-LHE, 2232605-LHE, 2232607-LHE, 2232608-LHE, 2232611-LHE thru 2232682-LHE, 2292457-LHE, 2292458-LHE, may incorporate prefix and/or suffix number.), followed by -2 thru -7, followed by Y, Y(T), AD or AWD.

Model(s) SY, followed by -2, followed by Y, Y(T), A or A(T)

Model(s) SYP, SYR, BH4.0-LHE, A10001-LHE, A7501-LHE, A8001-LHE, C2541-LHE, C2542-LHE, D250R-LHE, D280K-LHE, D300R-LHE, D350R-LHE, D400B-LHE, D430R-LHE, D470G-LHE, D480J-LHE, D480K-LHE, D480N-LHE, D480Q-LHE, D520H-LHE, D520K-LHE, D520Q-LHE, D620G-LHE, D630J-LHE, D630N-LHE, D630Q-LHE, D700G-LHE, F001-LHE, F002-LHE, HIF3-LHE, MC100-LHE, MC100-LHE, ME020-LHE, ME010-LHE, F2541-LHE, D2301-LHE, 1719057-LHE, 1719059-1-LHE, P0011-LHE, P0012-LHE, P0013-LHE, C6001-LHE, D2201-LHE, D2202-LHE or P0001-LHE, followed by -2, followed by Y, Y(T), A or A(T).

Model(s) VL-LHE , YL-LHE, SL-LHE, FL-LHE, YHD200-LHE, HA-LHE, LGC-LHE, JR-LHE, SP-LHE, 5025-LHE, followed by 2, followed by 1 thru 12, followed by A(T), Y(T), A2 or AW

Model(s) VL-LHE, YL-LHE, SL-LHE, FL-LHE, YHD200-LHE, HA-LHE, LGC-LHE, JR-LHE, SP-LHE, 5025-LHE, followed by 2 thru 12, followed by A(T), Y(T), A2 or AW

Model(s) XHD, XHE or XHQ, followed by -2 thru -15, followed by Y(T), YB(T) or YC(T), A, A-K, AW, AW-K, AD, AD-K, AWGD, AWGD-K, AQ, AQ-K, AWQ, AWQ-K, AD(BH) or AD(BH)-K.

Model(s) ZH, followed by -2 thru -16, followed by AB or AWB

Model(s) ZHR-LHE, SH-LHE, GH-LHE, NH-LHE, C1251-LHE, DF14-LHE, 5501-LHE, 75416-LHE, 543-LHE, followed by 2 thru 16, followed by AWD or A

Model(s) ZHR-LHE, SH-LHE, GH-LHE, NH-LHE, C1251-LHE, DF14-LHE, 5501-LHE, 75416-LHE, 543-LHE, followed by 2 thru 16, followed by Y(T)

Marking: Company name or trademark LHE, model designation and the Recognized Component Mark, on the device or carton.

Last Updated on 2020-02-20

并不是所有出现在本数据库中的公司名称和产品都满足了UL 跟踪检验服务的要求。只有带有 UL 标志的产品，才应该被视为经过UL认证，并满足UL 跟踪检验服务的要求。注意查看产品上的标志。

UL 允许在线认证目录中所含材料的复制遵循以下条件：1.指南信息、装配、构造、设计、系统和/或认证（文件）必须在不篡改任何数据（或图纸）的情况下完整且无误导性地呈现。2.“经 UL 允许从在线认证目录转载”声明必须出现在所摘取材料的邻近位置。此外，转载材料必须包含以下格式的版权声明： "© 2020 UL LLC"

产品认证证书

证书编号：CQC17134174484

申请人名称及地址

浙江联和电子有限公司
乐清市石帆镇后屿村

制造商名称及地址

浙江联和电子有限公司
乐清市石帆镇后屿村

生产企业名称及地址

浙江联和电子有限公司(V028069)
乐清市石帆镇后屿村

产品名称和系列、规格、型号

连接器聚酰胺 66(PA66)

型号见附件，材料名称：聚酰胺（PA66），材料牌号：A63RV0，全色， 球压:200℃，灼热丝可燃性指数(GWFI):960/0.3，灼热丝起燃温度(GWIT):960/0.3，燃烧等级:V-0/0.3mm,CTI600，红外光谱,差示扫描量热和热重分析见报告V-00601-2017134003019.

产品标准和技术要求

GB/T5169.21-2006,GB/T 5169.12-2013,GB/T 5169.13-2013,GB/T 5169.16-2008, GB/T 4207-2012, GB/T 6040-2002,GB/T 19466.1-2004,GB/T 19466.2-2004,GB/T 19466.3-2004,ISO 11358-1:2014

认证模式

产品检测+获证后监督

上述产品符合 CQC13-036047-2009 认证规则的要求，特发此证。

发证日期：2017 年 07 月 27 日

本证书的有效性依据发证机构的定期监督获得保持。

主任：

中国质量认证中心 CHINA QUALITY CERTIFICATION CENTRE

中国质量认证中心

中国．北京．南四环西路 188 号 9区 100070
http://www.cqc.com.cn

C 0101758

Verification No.: CLZJ1411264692

VERIFICATION OF LVD COMPLIANCE

Applicant:	Zhejiang Lianhe Electrical Co., Ltd. Houyu village, Shifan town, Yueqing city, Zhejiang province, China.
Manufacturer:	Same as applicant
Product Description:	Connector Terminal
Model No:	A1001, A1002, A1003, A1251, A1252, A1253, A1254, A1255, A1256, A1257, A1501, A1502, A1503, A2001, A2002, A2003, A2004, A2005, A2006, A2007, A2501, A2502, A2503, A2504, A2505, A2505, A2506, A2507, A2541, A2542, A2543, A2544, A2545, A3961, A3962, A3963, A3564, A5081, A5082, B1501, B1502, B2001, B2002, B2501, B2502, C01581, C01582, C1251, C2001, C2002, C2501, C2502, C2505, C2506, C3001, C3002, C3003, C3004, C3005, C3006, C3501, C3502, C3701, C3702, C4001, C4002, C4141, C4142, C4201, C4202, C4203, C4204, C4601, C4602, C4501, C4502, C4503, C4504, C5001, C5002, C5031, C5032, C6201, C6202, C6351, C6352, C6701, C6702, D2801, D2802, D2803, D4801, D4802, D4803, D4804, D6301, D6302, D6303

Sufficient samples of the product have been tested and found to be in conformity with

Test Standard:	EN 60320-1:2001/A1:2007 EN 60529:1991/A1:2000
As shown in the Test Report Number(s):	TLZJ1411264692
Date of issue:	November 27, 2014

Conclusion

This Verification of LVD Compliance has been granted to the applicant based on the results of tests, performed by laboratory of Global Testing Services Co., Ltd on sample of the above-mentioned product in accordance with the provisions of the relevant specific standards and the Low Voltage Directive 2014/35/EU. The CE marking as shown below can be affixed, under the responsibility of the manufacturer, after completion of an EC Declaration of Conformity and compliance with all relevant EC Directives. The affixing of the CE marking presumes in addition that conditions the conditions in annexes IIIand IV of the Directive are fulfilled.

Approved by: Hermann Weiher

For and on behalf of
Global Testing Services Co., Ltd

Global Testing Services Co., Ltd
E-mail:info@gts-lab.com http://www.gts-lab.com
Room 1501-1502, No. 520 Yishan Rd., Xuhui District, Shanghai, 200235 China

Copyright of this certificate is owned by Global Testing Services Co., Ltd and may not be reproduced other than in full and with the prior approval of the General Manager.

QUALITY MANAGEMENT SYSTEM CERTIFICATE

Certificate No. 00117Q310977R2S/3302

We hereby certify that

Zhejiang LianHe Electronics Co., Ltd.

Unified Social Credit Code/ Organization Code certificate: 913303825540033504

Registration Address: Houyu Village, Shifan Town, Yueqing City, Wenzhou City, Zhejiang Province, China

Production Address: Yueshang Pioneer Park, Yueqing Bay Port Area, Yueqing City, Wenzhou City, Zhejiang Province China

by reason of its

Quality Management System

has been awarded this certificate for compliance with the standard

GB/T 19001-2016 / ISO 9001:2015

The Quality Management System Applies in the following area:

The Design, Production of Electronics Connector

Certified since: February 13, 2012 Valid from: December 11, 2017 Valid until: December 14, 2020

After a surveillance cycle, the certificate is valid only when used together with an Acceptance Notice of Surveillance Audit issued by CQC.
Please access www.cqc.com.cn for checking validity of the certificate.
This certificate and its relevant information can query in the website of Certification and Accreditation Administration of the People's Republic of China (www.cnca.gov.cn).

中国认可
国际互认
管理体系
MANAGEMENT SYSTEM
CNAS C001-M

Signed by: Wang Kejiao

CHINA QUALITY CERTIFICATION CENTRE

Section 9, No.188, Nansihuan(the South Fourth Ring Road) Xilu(West Road), Beijing 100070,China

http://www.cqc.com.cn

Q 0073728

2015年版

THE INTERNATIONAL CERTIFICATION NETWORK

CERTIFICATE

IQNet and
CQC
hereby certify that the organization

Zhejiang LianHe Electronics Co., Ltd.

Registration Address: Houyu Village, Shifan Town, Yueqing City, Wenzhou City, Zhejiang Province, China
Production Address: Yueshang Pioneer Park, Yueqing Bay Port Area, Yueqing City, Wenzhou City, Zhejiang Province China

For the following field of activities

The Design, Production of Electronics Connector

Has implemented and maintains a
Management System
Which fulfils the requirements of the following standard

GB/T 19001-2016 / ISO 9001:2015

Issued on: December 11, 2017

Validity date: December 14, 2020

Registration Number: 00117Q310977R2S/3302

Michael Drechsel
President of IQNet

Wang Kejiao
President of CQC

IQNet Partners*:
AENOR *Spain* AFNOR Certification *France* AIB-Vinçotte International *Belgium* ANCE-SIGE *Mexico* APCER *Portugal* CCC *Cyprus*
CISQ *Italy* CQC *China* CQM *China* CQS *Czech Republic* Cro Cert *Croatia* DQS Holding GmbH *Germany*
FCAV *Brazil* FONDONORMA *Venezuela* ICONTEC *Colombia* IMNC *Mexico* Inspecta Certification *Finland* IRAM *Argentina*
JQA *Japan* KFQ *Korea* MIRTEC *Greece* MSZT *Hungary* Nemko AS *Norway* NSAI *Ireland* PCBC *Poland*
Quality Austria *Austria* RR *Russia* SII *Israel* SIQ *Slovenia* SIRIM QAS International *Malaysia*
SQS *Switzerland* SRAC *Romania* TEST St Petersburg *Russia* TSE *Turkey* YUQS *Serbia*
IQNet is represented in the USA by: AFNOR Certification, CISQ, DQS Holding GmbH and NSAI Inc.
* The list of IQNet partners is valid at the time of issue of this certificate. Updated information is available under www.iqnet-certification.com

检测报告

编号: NGBEC2200627404　　日期: 2022年04月20日　　第1页,共11页

客户名称 :　浙江联和电子有限公司
客户地址 :　浙江省乐清市乐清湾港区乐商创业园

样品名称 :　PA66 连接器
型号 :　XHD-5A
客户参考信息 :　见附件
以上样品及信息由客户提供。

SGS工作编号 :　NP22-001796 - NB
样品接收日期 :　2022年04月08日
检测周期 :　2022年04月08日 - 2022年04月20日
检测要求 :　根据客户要求检测
检测方法 :　请参见下一页
检测结果 :　请参见下一页
结论 :　基于所送样品002的指定部位进行的检测，镉、铅、汞、六价铬的检测结果符合欧盟RoHS指令2011/65/EU附录II的修正指令(EU) 2015/863的限值要求。

基于所送样品001的指定部位进行的检测，镉、铅、汞、六价铬、多溴联苯(PBBs)、多溴二苯醚(PBDEs)、邻苯二甲酸酯（如邻苯二甲酸二丁酯 (DBP)、邻苯二甲酸丁苄酯(BBP)、邻苯二甲酸二(2-乙基己基)酯(DEHP)和邻苯二甲酸二异丁酯(DIBP)）的检测结果符合欧盟RoHS指令2011/65/EU附录II的修正指令(EU) 2015/863的限值要求。

通标标准技术服务有限公司宁波分公司
授权签名

张倩倩

Ashley Zhang张倩倩
批准签署人

scan to see the report
DDEC5311

Unless otherwise agreed in writing, this document is issued by the Company subject to its General Conditions of Service printed overleaf, available on request or accessible at http://www.sgs.com/en/Terms-and-Conditions.aspx and, for electronic format documents, subject to Terms and Conditions for Electronic Documents at http://www.sgs.com/en/Terms-and-Conditions/Terms-e-Document.aspx. Attention is drawn to the limitation of liability, indemnification and jurisdiction issues defined therein. Any holder of this document is advised that information contained hereon reflects the Company's findings at the time of its intervention only and within the limits of Client's instructions, if any. The Company's sole responsibility is to its Client and this document does not exonerate parties to a transaction from exercising all their rights and obligations under the transaction documents. This document cannot be reproduced except in full, without prior written approval of the Company. Any unauthorized alteration, forgery or falsification of the content or appearance of this document is unlawful and offenders may be prosecuted to the fullest extent of the law. Unless otherwise stated the results shown in this test report refer only to the sample(s) tested .
Attention: To check the authenticity of testing /inspection report & certificate, please contact us at telephone: (86-755) 8307 1443, or email: CN.Doccheck@sgs.com

No.1177, Lingyun Road, Hi-Tech Zone, Ningbo, Zhejiang, China 315040　t E&E (86-574)89070249　www.sgsgroup.com.cn
中国・浙江・宁波高新区凌云路1177号　邮编: 315040　t HL (86-574)89070271　t ML (86-574)89070242　sgs.china@sgs.com

检测结果 :

检测样品描述 :

样品编号	SGS样品ID	描述
SN1	NGB22-006274.001	白色塑料部分
SN2	NGB22-006274.002	银色金属部分

备注:

(1) 1 mg/kg = 0.0001%
(2) MDL = 方法检测限
(3) ND = 未检出 (< MDL)
(4) "-" = 未规定

RoHS指令2011/65/EU附录II的修正指令(EU) 2015/863

检测方法 : 参考IEC 62321-4:2013+AMD1:2017, IEC 62321-5:2013, IEC 62321-7-2:2017, IEC 62321-6:2015和IEC 62321-8:2017，采用ICP-OES,UV-Vis和GC-MS进行分析。

检测项目	限值	单位	MDL	*001*
镉(Cd)	100	mg/kg	2	ND
铅(Pb)	1000	mg/kg	2	ND
汞(Hg)	1000	mg/kg	2	ND
六价铬 (Cr(VI))	1000	mg/kg	8	ND
多溴联苯(PBBs)之和	1000	mg/kg	-	ND
一溴联苯	-	mg/kg	5	ND
二溴联苯	-	mg/kg	5	ND
三溴联苯	-	mg/kg	5	ND
四溴联苯	-	mg/kg	5	ND
五溴联苯	-	mg/kg	5	ND
六溴联苯	-	mg/kg	5	ND
七溴联苯	-	mg/kg	5	ND
八溴联苯	-	mg/kg	5	ND
九溴联苯	-	mg/kg	5	ND
十溴联苯	-	mg/kg	5	ND
多溴二苯醚之和(PBDEs)	1000	mg/kg	-	ND
一溴二苯醚	-	mg/kg	5	ND
二溴二苯醚	-	mg/kg	5	ND
三溴二苯醚	-	mg/kg	5	ND
四溴二苯醚	-	mg/kg	5	ND
五溴二苯醚	-	mg/kg	5	ND

Unless otherwise agreed in writing, this document is issued by the Company subject to its General Conditions of Service printed overleaf, available on request or accessible at http://www.sgs.com/en/Terms-and-Conditions.aspx and, for electronic format documents, subject to Terms and Conditions for Electronic Documents at http://www.sgs.com/en/Terms-and-Conditions/Terms-e-Document.aspx. Attention is drawn to the limitation of liability, indemnification and jurisdiction issues defined therein. Any holder of this document is advised that information contained hereon reflects the Company's findings at the time of its intervention only and within the limits of Client's instructions, if any. The Company's sole responsibility is to its Client and this document does not exonerate parties to a transaction from exercising all their rights and obligations under the transaction documents. This document cannot be reproduced except in full, without prior written approval of the Company. Any unauthorized alteration, forgery or falsification of the content or appearance of this document is unlawful and offenders may be prosecuted to the fullest extent of the law. Unless otherwise stated the results shown in this test report refer only to the sample(s) tested .
Attention: To check the authenticity of testing /inspection report & certificate, please contact us at telephone: (86-755) 8307 1443, or email: CN.Doccheck@sgs.com

SGS-CSTC Standards Technical Services Co., Ltd. Ningbo Branch Chemical Laboratory
No.1177, Lingyun Road, Hi-Tech Zone, Ningbo, Zhejiang, China 315040 t E&E (86-574)89070249 www.sgsgroup.com.cn
中国·浙江·宁波高新区凌云路1177号 邮编: 315040 t HL (86-574)89070271 t ML (86-574)89070242 sgs.china@sgs.com

检测项目	限值	单位	MDL	001
六溴二苯醚	-	mg/kg	5	ND
七溴二苯醚	-	mg/kg	5	ND
八溴二苯醚	-	mg/kg	5	ND
九溴二苯醚	-	mg/kg	5	ND
十溴二苯醚	-	mg/kg	5	ND
邻苯二甲酸二丁酯 (DBP)	1000	mg/kg	50	ND
邻苯二甲酸丁苄酯(BBP)	1000	mg/kg	50	ND
邻苯二甲酸二(2-乙基己基)酯(DEHP)	1000	mg/kg	50	ND
邻苯二甲酸二异丁酯(DIBP)	1000	mg/kg	50	ND

备注：

(1) 最大允许极限值引用自RoHS指令(EU) 2015/863 。

(2) IEC 62321系列等同于 EN 62321系列 https://www.cenelec.eu/dyn/www/f?p=104:30:1742232870351101::::FSP_ORG_ID,FSP_LANG_ID:1258637,25。

(3) 2021年7月22号开始，DEHP, BBP, DBP 和 DIBP的限制适用于医疗器械，包括体外医疗器械，监控仪表，包括工业监测和控制仪器。

RoHS指令2011/65/EU附录II的修正指令(EU) 2015/863

检测方法： 参考IEC 62321-4:2013+AMD1:2017, IEC 62321-5:2013 和 IEC 62321-7-1:2015, 采用ICP-OES和UV-Vis 进行分析.

检测项目	限值	单位	MDL	002
镉 (Cd)	100	mg/kg	2	ND
铅(Pb)	1000	mg/kg	2	ND
汞 (Hg)	1000	mg/kg	2	ND
六价铬(Cr(VI))▾	-	μg/cm²	0.10	ND

备注：

(1) 最大允许极限值引用自RoHS指令(EU) 2015/863。

(2) IEC 62321系列等同于 EN 62321系列 https://www.cenelec.eu/dyn/www/f?p=104:30:1742232870351101::::FSP_ORG_ID,FSP_LANG_ID:1258637,25

(3) ▾ = a. 当六价铬的浓度高于0.13 μg/cm2时，样品为阳性，即含有六价铬；

b. 当六价铬的浓度为ND(低于0.10 μg/cm2)时，样品为阴性，即未检测到六价铬；

c. 当六价铬的浓度介于0.10 μg/cm2与0.13 μg/cm2之间时，无法直接判定是否检测到六价铬，因不同个体的样品表面差异可能会影响测定结果；

由于未获知样品的存储条件和生产日期，样品的六价铬测试结果仅能代表测试时样品含六价铬的状态。

Unless otherwise agreed in writing, this document is issued by the Company subject to its General Conditions of Service printed overleaf, available on request or accessible at http://www.sgs.com/en/Terms-and-Conditions.aspx and, for electronic format documents, subject to Terms and Conditions for Electronic Documents at http://www.sgs.com/en/Terms-and-Conditions/Terms-e-Document.aspx. Attention is drawn to the limitation of liability, indemnification and jurisdiction issues defined therein. Any holder of this document is advised that information contained hereon reflects the Company's findings at the time of its intervention only and within the limits of Client's instructions, if any. The Company's sole responsibility is to its Client and this document does not exonerate parties to a transaction from exercising all their rights and obligations under the transaction documents. This document cannot be reproduced except in full, without prior written approval of the Company. Any unauthorized alteration, forgery or falsification of the content or appearance of this document is unlawful and offenders may be prosecuted to the fullest extent of the law. Unless otherwise stated the results shown in this test report refer only to the sample(s) tested .
Attention: To check the authenticity of testing /inspection report & certificate, please contact us at telephone: (86-755) 8307 1443, or email: CN.Doccheck@sgs.com

SGS-CSTC Standards Technical Services Co., Ltd. Ningbo Branch Chemical Laboratory
No.1177, Lingyun Road, Hi-Tech Zone, Ningbo, Zhejiang, China 315040 t E&E (86-574)89070249 www.sgsgroup.com.cn
中国·浙江·宁波高新区凌云路1177号 邮编: 315040 t HL (86-574)89070271 t ML (86-574)89070242 sgs.china@sgs.com

除非另有说明，参照ILAC-G8:09/2019，使用简单接受（w=0）的二元判定规则进行符合性判定。
除非另有说明，此报告结果仅对检测的样品负责。本报告未经本公司书面许可，不可部分复制。
检测报告仅用于客户科研、教学、内部质量控制、产品研发等目的，仅供内部参考。

Unless otherwise agreed in writing, this document is issued by the Company subject to its General Conditions of Service printed overleaf, available on request or accessible at http://www.sgs.com/en/Terms-and-Conditions.aspx and, for electronic format documents, subject to Terms and Conditions for Electronic Documents at http://www.sgs.com/en/Terms-and-Conditions/Terms-e-Document.aspx. Attention is drawn to the limitation of liability, indemnification and jurisdiction issues defined therein. Any holder of this document is advised that information contained hereon reflects the Company's findings at the time of its intervention only and within the limits of Client's instructions, if any. The Company's sole responsibility is to its Client and this document does not exonerate parties to a transaction from exercising all their rights and obligations under the transaction documents. This document cannot be reproduced except in full, without prior written approval of the Company. Any unauthorized alteration, forgery or falsification of the content or appearance of this document is unlawful and offenders may be prosecuted to the fullest extent of the law. Unless otherwise stated the results shown in this test report refer only to the sample(s) tested .
Attention: To check the authenticity of testing /inspection report & certificate, please contact us at telephone: (86-755) 8307 1443, or email: CN.Doccheck@sgs.com

SGS-CSTC Standards Technical Services Co., Ltd. Ningbo Branch Chemical Laboratory
No.1177, Lingyun Road, Hi-Tech Zone, Ningbo, Zhejiang, China 315040 t E&E (86-574)89070249 www.sgsgroup.com.cn
中国·浙江·宁波高新区凌云路1177号 邮编: 315040 t HL (86-574)89070271 t ML (86-574)89070242 sgs.china@sgs.com

附件:
XH , 1.0, SH, SHD, 1.25, 51021, DF14, DF13, GH, ZH, PH, PHB, PA, PHSD, DF11, C1251, 51047, 51146, FI-S, PHD, YHD200, PA, SMP, SMW, SMH, SMH200, SMH200-H, YH200, 20039WR, 杜邦2.0, XH/TJC3, XA, HA, XHB, XHD, XHE, EH, EI, 小四P, 5263, 5264, 5267, 5268, SZN, SAN, SCN, SCND, JC15, JC20, JC25, 5102, 5240, SMH250, SMP250, SMW250, 25048HS, 25045HP, SM, TJC8, 杜邦2.54, TJC8A, 杜邦带锁, TJC8B, TJC8H, 5051, 2510, 美尚美, 43640, 43645, 43020, 43025, 5500, 5600, VH, VHRR, YH396, VHR, 35156, 2139, 3.96, 90331, 5195, 5196, 39612, FL, 5557, 5559, 5566, 5569, SL, RV42, EL, YL, 小EL, 8981, 大四P, 5058, 5.08, L6.2, VL, VLP/VLR, TJC2, TJC2A, TJC2B, TJC4, TJC1, 1806, MX3.0, 1.58, 51005, 51006, BH3.5, BH4.0, 63080, 51004, TJC15, A4203, CL014, OTP, MKH, SMF, Cy-X201, 35108, 35150, 35151, 35224, 35180, 35965, 42021, 42022, 42002, 35955, SA, SCS, 35189, 35196, CH10, CH2.5, 543, SLP, SLR, YHL500, YWL500, FFC, FPC, 20030, 250, LGC, S11, YH025, 35155, 25415, 5197, 5198, 110, 2.8, 6.3, SCS
NH, XHQ, 42474, 42475, QH, NV, 50300, 50301, 5025, 3191, 5199, STV5, YHL500, YWL500, F001, F002, D440, D600, D620, D700, D220, D230, D250, D480, D520, D280, D630, D430, D400, D450, U-T, F1001-T, SIN-T, 774, 773, 778, 294, TU-JTK(SV), TU(SNB), TO-JTK(RV), MDD, FDD, TG-JT, IDC, AUTO, CONNECTOR, DJ70, DT04, DT06, UY/K1, UY2/K2, UR/K3, UR2, UB/K4, UB2A, UG/K5, U1R/K8, U1B/K9, HJKT10, UDW2, 314, A5001, A5002, MC100, FPC2.54, SGN, PHR, ZHR, 205, 5.2, C1801, C1802, 2060, A5003, ME020, ME010, FPC/FFC, B2541, 1971845, 1971846, 2232043, 2232044, 2232511, 1971895, 1971896, JWPF, SY, Molex1.5, ME0100, RAST, A5004, DV, SJN, SDN, 35182, 35524, RCY, LC, VR, SHJ, SHL, DF19, ACH, IL-Z, SATA, XSR, SUR, SUH, ZE, ZND, ZPD, SFH, PUD, AMP2.0, 35507, DF3, PND, RE, RA, RF, SYP/SYR, HIF3, MC100/ME020/ME010, F2541, A5005, A5006, A5007, A2509, A25010, A25011, A25012, B13001, B76201, VHB, VHC, VHD
1969738, 1969740, 1971845, 1971846, 1971895, 1971896, 1971946 thru 1971949, 1971954 thru 1971957, 2232008 thru 2232011, 2232000 thru 2232003, 2232016 thru 2232019, 1971962 thru 1971965, 2232024 thru 2232027, 2232289 thru 2232292, 2232043 thru 2232074, 2232298 thru 2232301, 2232511, 2232532, 2232557, 2232559, 2232560, 2232562, 2232563, 2232565, 2232566, 2232568, 2232569, 2232571, 2232572, 2232574, 2232575, 2232577, 2232578, 2232580, 2232581, 2232583, 2232584, 2232586, 2232587, 2232589, 2232590, 2232592, 2232593, 2232595, 2232596, 2232598, 2232599, 2232601, 2232602, 2232604, 2232605, 2232607, 2232608, 2232611 thru 2232682, 2292457, 2292458,
1064, 2064, 3064, 1080, 2080, 3080, 1100, 2100, 3100, 1120, 2120, 3120, 1150, 2150, 3150,
1180, 2180, 3180, 1230, 2230, 3230, 1250, 2250, 3250, 1280, 2280, 3280, 1300, 2300, 3300, 1480, 2480, 3480,
1630, 2630, 3630, 1780, 2780, 3780, 1950, 2950, 3950, 1010, 2010, 3010, 1013, 2013, 3013, 1015, 2015, 3015,
1016, 2016, 3016, 1025, 2025, 3025, 1035, 2035, 3035, 1045, 2045, 3045, 1058, 2058, 3058, 1999, 2999, 3999,
401, 402, 403, 503, TPA, BX
A1001 A1002 A1003 A1004 A1005 A1006 A1007 A1008 A1009 A1251 A1252 A1253 A1254
A1255 A1256 A1257 A1258 A1259 A1501 A1502 A1503 A1504 A1505 A1506 A1507 A1508
A1509 A2001 A2002 A2003 A2004 A2005 A2006 A2007 A2008 A2009 A2010 A2011 A2012
A2013 A2014 A2015 A2016 A2017 A2018 A2501 A2502 A2503 A2504 A2505 A2506 A2507
A2508 A2509 A25010 A25011 A25012 A25013 A25014 A25015 A25016 A25017 A25018 A2541 A2542
A2543 A2544 A2545 A2546 A2547 A2548 A2549 A3001 A3002 A3003 A3004 A3005 A3006
A3007 A3008 A3009 A3301 A3302 A3303 A3304 A3305 A3306 A3307 A3308 A3309 A3961
A3962 A3963 A3964 A3965 A3966 A3967 A3968 A3969 A4201 A4202 A4203 A4204 A4205
A4206 A4207 A4208 A4209 A5001 A5002 A5003 A5004 A5005 A5006 A5007 A5008 A5009
A5081 A5082 A5083 A5084 A5085 A5086 A5087 A5088 A5089 A6501 A6502 A6503 A6504
A6505 A6506 A6507 A6508 A6509 B1251 B1252 B1253 B1254 B1255 B1256 B1257 B1258
B1259 B1501 B1502 B1503 B1504 B1505 B1506 B1507 B1508 B1509 B2001 B2002 B2003
B2004 B2005 B2006 B2007 B2008 B2009 B2501 B2502 B2503 B2504 B2505 B2506 B2507

Unless otherwise agreed in writing, this document is issued by the Company subject to its General Conditions of Service printed overleaf, available on request or accessible at http://www.sgs.com/en/Terms-and-Conditions.aspx and, for electronic format documents, subject to Terms and Conditions for Electronic Documents at http://www.sgs.com/en/Terms-and-Conditions/Terms-e-Document.aspx. Attention is drawn to the limitation of liability, indemnification and jurisdiction issues defined therein. Any holder of this document is advised that information contained hereon reflects the Company's findings at the time of its intervention only and within the limits of Client's instructions, if any. The Company's sole responsibility is to its Client and this document does not exonerate parties to a transaction from exercising all their rights and obligations under the transaction documents. This document cannot be reproduced except in full, without prior written approval of the Company. Any unauthorized alteration, forgery or falsification of the content or appearance of this document is unlawful and offenders may be prosecuted to the fullest extent of the law. Unless otherwise stated the results shown in this test report refer only to the sample(s) tested .
Attention: To check the authenticity of testing /inspection report & certificate, please contact us at telephone: (86-755) 8307 1443, or email: CN.Doccheck@sgs.com
检验检测专用章 Inspection & Testing Services
SGS-CSTC Standards Technical Services Co., Ltd. Ningbo Branch Chemical Laboratory
No.1177, Lingyun Road, Hi-Tech Zone, Ningbo, Zhejiang, China 315040 t E&E (86-574)89070249 www.sgsgroup.com.cn
中国·浙江·宁波高新区凌云路1177号 邮编: 315040 t HL (86-574)89070271 t ML (86-574)89070242 sgs.china@sgs.com

B2508 B2509 B2541 B2542 B2543 B2544 B2545 B2546 B2547 B2548 B2549 B76201 B76202
B76203 B76204 B76205 B76206 B76207 B76208 B76209 B13001 B13002 B13003 B13004
B13005 B13006 B13007 B13008 B13009 C01581 C01582 C01583 C01584 C01585 C01586 C01587
C01588 C01589 C1251 C1252 C1253 C1254 C1255 C1256 C1257 C1258 C1259 C1501 C1502
C1503 C1504 C1505 C1506 C1507 C1508 C1509 C2001 C2002 C2003 C2004 C2005
C2006 C2007 C2008 C2009 C2501 C2502 C2503 C2504 C2505 C2506 C2507 C2508
C2509 C25010 C25011 C25012 C25013 C25014 C25015 C25016 C25017 C25018 C2541 C2542
C2543 C2544 C2545 C2546 C2547 C2548 C2549 C3001 C3002 C3003 C3004 C3005
C3006 C3007 C3008 C3009 C3501 C3502 C3503 C3504 C3505 C3506 C3507 C3508
C3509 C3681 C3682 C3683 C3684 C3685 C3686 C3687 C3688 C3689 C3961 C3962
C3963 C3964 C3965 C3966 C3967 C3968 C3969
C4001 C4002 C4003 C4004 C4005 C4006 C4007 C4008 C4009 C4141 C4142 C4143 C4144
C4145 C4146 C4147 C4148 C4149 C4201 C4202 C4203 C4204 C4205 C4206 C4207 C4208
C4209 C4501 C4502 C4503 C4504 C4505 C4506 C4507 C4508 C4509 C5001 C5002 C5003
C5004 C5005 C5006 C5007 C5008 C5009 C6201 C6202 C6203 C6204 C6205 C6206 C6207
C6208 C6209 C6351 C6352 C6353 C6354 C6355 C6356 C6357 C6358 C6359 D2801 D2802
D2803 D2804 D2805 D2806 D2807 D2808 D2809 D4801 D4802 D4803 D4804 D4805 D4806
D4807 D4808 D4809 D5201 D5202 D5203 D5204 D5205 D5206 D5207 D5208 D5209 D6301
D6302 D6303 D6304 D6305 D6306 D6307 D6308 D6309 D6201 D6202 D6203 D6204 D6205
D6206 D6207 D6208 D6209 D7001 D7002 D7003 D7004 D7005 D7006 D7007 D7008 D7009
F0501 F0502 F0503 F0504 F0505 F0506 F0507 F0508 F0509 F05010 F05011 F05012
F05013 F05014 F05015 F05016 F05017 F05018 F1001 F1002 F1003 F1004 F1005 F1006 F1007
F1008 F1009 F10010 F10011 F10012 F10013 F10014 F10015 F10016 F10017 F10018 F2541 F2542
F2543 F2544 F2545 F2546 F2547 F2548 F2549 P0001 P0002 P0003 P0004 P0005 P0006
P0007 P0008 P0009 P0010 P0011 P0012 P0013 P0014 P0015 P0016 P0017 P0018 P0019
P0020 P0021 P0022 P0023 P0024 P0025 P0026 P0027 D2301 D2302 D2303 D2304 D2305
D2306 D2307 D2308 D2309 D6001 D6002 D6003 D6004 D6005 D6006 D6007 D6008 D6009
D2201 D2202 D2203 D2204 D2205 D2206 D2207 D2208 D2209

Unless otherwise agreed in writing, this document is issued by the Company subject to its General Conditions of Service printed overleaf, available on request or accessible at http://www.sgs.com/en/Terms-and-Conditions.aspx and, for electronic format documents, subject to Terms and Conditions for Electronic Documents at http://www.sgs.com/en/Terms-and-Conditions/Terms-e-Document.aspx. Attention is drawn to the limitation of liability, indemnification and jurisdiction issues defined therein. Any holder of this document is advised that information contained hereon reflects the Company's findings at the time of its intervention only and within the limits of Client's instructions, if any. The Company's sole responsibility is to its Client and this document does not exonerate parties to a transaction from exercising all their rights and obligations under the transaction documents. This document cannot be reproduced except in full, without prior written approval of the Company. Any unauthorized alteration, forgery or falsification of the content or appearance of this document is unlawful and offenders may be prosecuted to the fullest extent of the law. Unless otherwise stated the results shown in this test report refer only to the sample(s) tested .
Attention: To check the authenticity of testing /inspection report & certificate, please contact us at telephone: (86-755) 8307 1443, or email: CN.Doccheck@sgs.com

SGS-CSTC Standards Technical Services Co., Ltd. Ningbo Branch Chemical Laboratory
No.1177, Lingyun Road, Hi-Tech Zone, Ningbo, Zhejiang, China 315040 t E&E (86-574)89070249 www.sgsgroup.com.cn
中国·浙江·宁波高新区凌云路1177号 邮编: 315040 t HL (86-574)89070271 t ML (86-574)89070242 sgs.china@sgs.com

附件

元素(IEC62321) 测试流程图

1)样品按照下述流程被完全消解

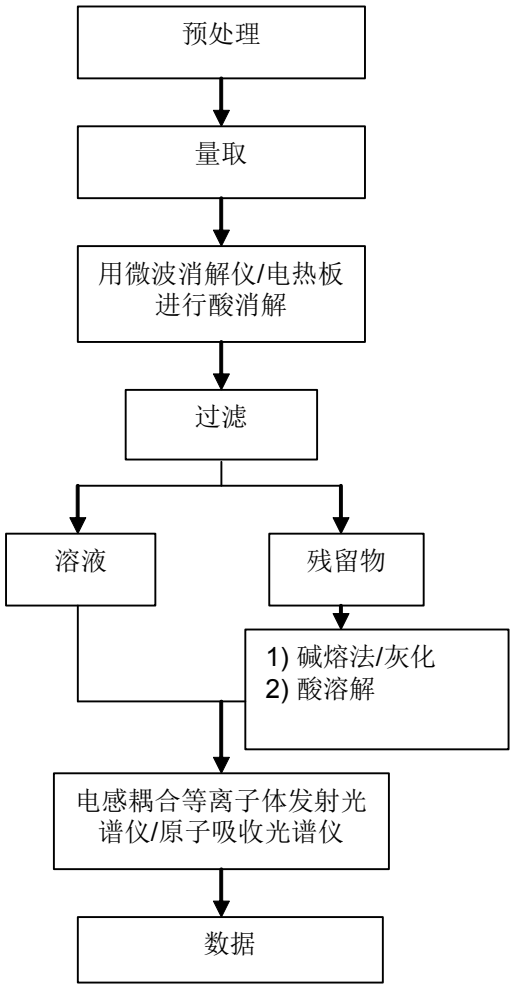

Unless otherwise agreed in writing, this document is issued by the Company subject to its General Conditions of Service printed overleaf, available on request or accessible at http://www.sgs.com/en/Terms-and-Conditions.aspx and, for electronic format documents, subject to Terms and Conditions for Electronic Documents at http://www.sgs.com/en/Terms-and-Conditions/Terms-e-Document.aspx. Attention is drawn to the limitation of liability, indemnification and jurisdiction issues defined therein. Any holder of this document is advised that information contained hereon reflects the Company's findings at the time of its intervention only and within the limits of Client's instructions, if any. The Company's sole responsibility is to its Client and this document does not exonerate parties to a transaction from exercising all their rights and obligations under the transaction documents. This document cannot be reproduced except in full, without prior written approval of the Company. Any unauthorized alteration, forgery or falsification of the content or appearance of this document is unlawful and offenders may be prosecuted to the fullest extent of the law. Unless otherwise stated the results shown in this test report refer only to the sample(s) tested .
Attention: To check the authenticity of testing /inspection report & certificate, please contact us at telephone: (86-755) 8307 1443, or email: CN.Doccheck@sgs.com

No.1177, Lingyun Road, Hi-Tech Zone, Ningbo, Zhejiang, China 315040 t E&E (86-574)89070249 www.sgsgroup.com.cn
中国·浙江·宁波高新区凌云路1177号 邮编: 315040 t HL (86-574)89070271 t ML (86-574)89070242 sgs.china@sgs.com

附件

六价铬测试流程图

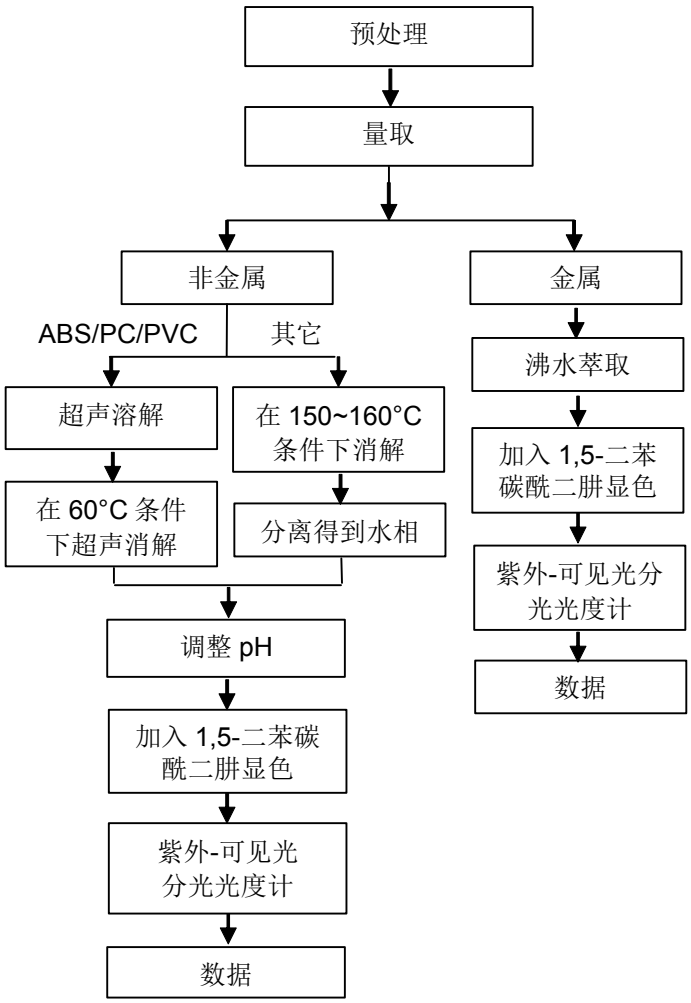

Unless otherwise agreed in writing, this document is issued by the Company subject to its General Conditions of Service printed overleaf, available on request or accessible at http://www.sgs.com/en/Terms-and-Conditions.aspx and, for electronic format documents, subject to Terms and Conditions for Electronic Documents at http://www.sgs.com/en/Terms-and-Conditions/Terms-e-Document.aspx. Attention is drawn to the limitation of liability, indemnification and jurisdiction issues defined therein. Any holder of this document is advised that information contained hereon reflects the Company's findings at the time of its intervention only and within the limits of Client's instructions, if any. The Company's sole responsibility is to its Client and this document does not exonerate parties to a transaction from exercising all their rights and obligations under the transaction documents. This document cannot be reproduced except in full, without prior written approval of the Company. Any unauthorized alteration, forgery or falsification of the content or appearance of this document is unlawful and offenders may be prosecuted to the fullest extent of the law. Unless otherwise stated the results shown in this test report refer only to the sample(s) tested .
Attention: To check the authenticity of testing /inspection report & certificate, please contact us at telephone: (86-755) 8307 1443, or email: CN.Doccheck@sgs.com
SGS-CSTC Standards Technical Services Co., Ltd. Ningbo Branch Chemical Laboratory
No.1177, Lingyun Road, Hi-Tech Zone, Ningbo, Zhejiang, China 315040 t E&E (86-574)89070249 www.sgsgroup.com.cn
中国·浙江·宁波高新区凌云路1177号 邮编: 315040 t HL (86-574)89070271 t ML (86-574)89070242 sgs.china@sgs.com
Member of the SGS Group (SGS SA)

附件

PBBs/PBDEs 测试流程图

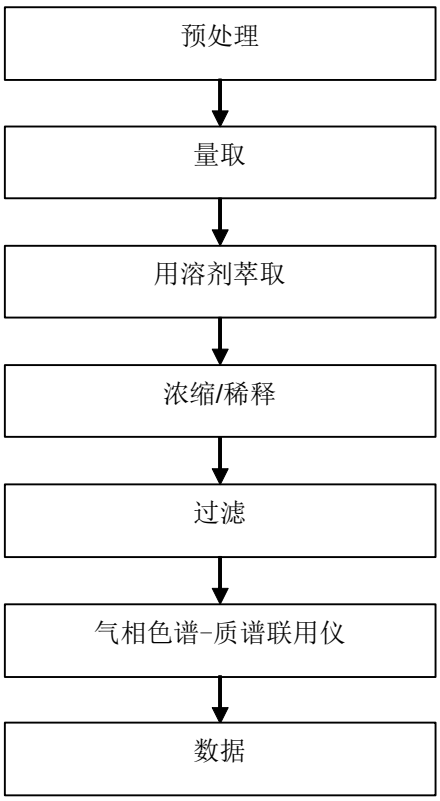

Unless otherwise agreed in writing, this document is issued by the Company subject to its General Conditions of Service printed overleaf, available on request or accessible at http://www.sgs.com/en/Terms-and-Conditions.aspx and, for electronic format documents, subject to Terms and Conditions for Electronic Documents at http://www.sgs.com/en/Terms-and-Conditions/Terms-e-Document.aspx. Attention is drawn to the limitation of liability, indemnification and jurisdiction issues defined therein. Any holder of this document is advised that information contained hereon reflects the Company's findings at the time of its intervention only and within the limits of Client's instructions, if any. The Company's sole responsibility is to its Client and this document does not exonerate parties to a transaction from exercising all their rights and obligations under the transaction documents. This document cannot be reproduced except in full, without prior written approval of the Company. Any unauthorized alteration, forgery or falsification of the content or appearance of this document is unlawful and offenders may be prosecuted to the fullest extent of the law. Unless otherwise stated the results shown in this test report refer only to the sample(s) tested .
Attention: To check the authenticity of testing /inspection report & certificate, please contact us at telephone: (86-755) 8307 1443, or email: CN.Doccheck@sgs.com

SGS-CSTC Standards Technical Services Co., Ltd. Ningbo Branch Chemical Laboratory
No.1177, Lingyun Road, Hi-Tech Zone, Ningbo, Zhejiang, China 315040 t E&E (86-574)89070249 www.sgsgroup.com.cn
中国·浙江·宁波高新区凌云路1177号 邮编: 315040 t HL (86-574)89070271 t ML (86-574)89070242 sgs.china@sgs.com

附件

Phthalates 测试流程图

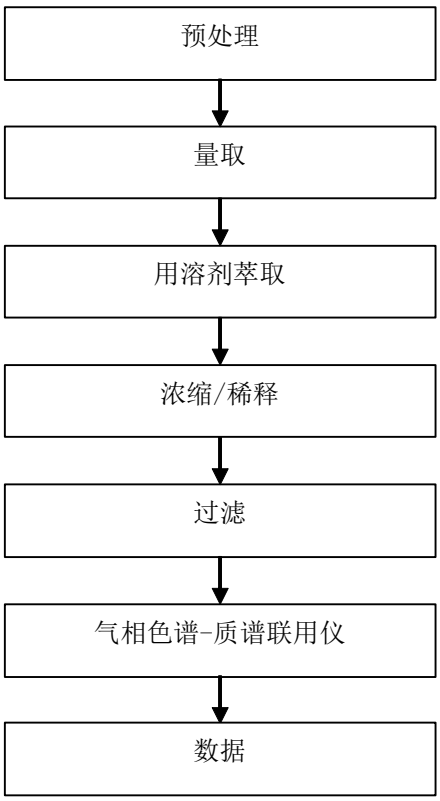

Unless otherwise agreed in writing, this document is issued by the Company subject to its General Conditions of Service printed overleaf, available on request or accessible at http://www.sgs.com/en/Terms-and-Conditions.aspx and, for electronic format documents, subject to Terms and Conditions for Electronic Documents at http://www.sgs.com/en/Terms-and-Conditions/Terms-e-Document.aspx. Attention is drawn to the limitation of liability, indemnification and jurisdiction issues defined therein. Any holder of this document is advised that information contained hereon reflects the Company's findings at the time of its intervention only and within the limits of Client's instructions, if any. The Company's sole responsibility is to its Client and this document does not exonerate parties to a transaction from exercising all their rights and obligations under the transaction documents. This document cannot be reproduced except in full, without prior written approval of the Company. Any unauthorized alteration, forgery or falsification of the content or appearance of this document is unlawful and offenders may be prosecuted to the fullest extent of the law. Unless otherwise stated the results shown in this test report refer only to the sample(s) tested .
Attention: To check the authenticity of testing /inspection report & certificate, please contact us at telephone: (86-755) 8307 1443, or email: CN.Doccheck@sgs.com

SGS-CSTC Standards Technical Services Co., Ltd. Ningbo Branch Chemical Laboratory
No.1177, Lingyun Road, Hi-Tech Zone, Ningbo, Zhejiang, China 315040 t E&E (86-574)89070249 www.sgsgroup.com.cn
中国·浙江·宁波高新区凌云路1177号 邮编: 315040 t HL (86-574)89070271 t ML (86-574)89070242 sgs.china@sgs.com

样品照片:

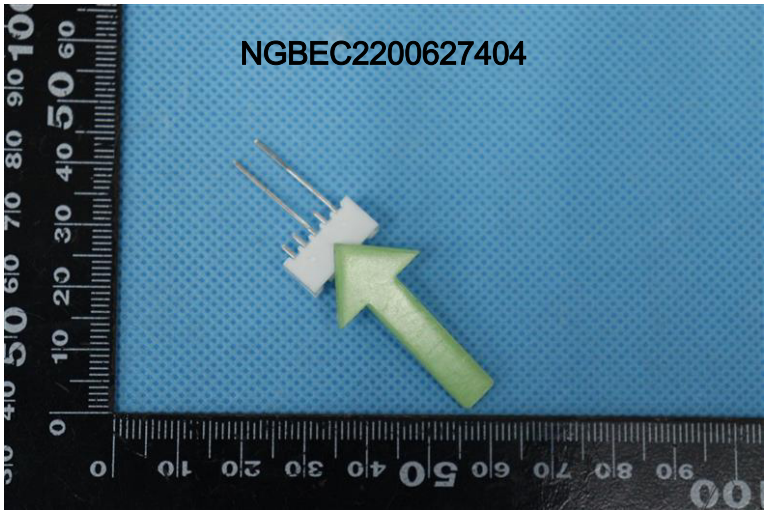

NGB22-006274.001

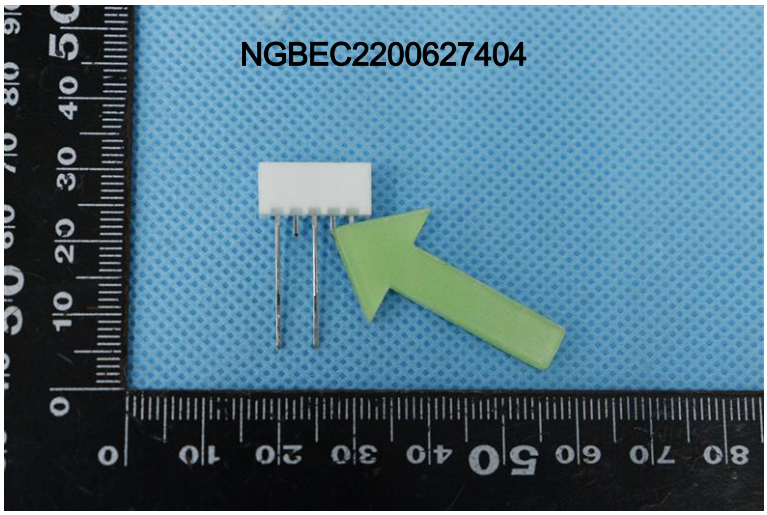

NGB22-006274.002

此照片仅限于随SGS正本报告使用

*** 报告完 ***

Unless otherwise agreed in writing, this document is issued by the Company subject to its General Conditions of Service printed overleaf, available on request or accessible at http://www.sgs.com/en/Terms-and-Conditions.aspx and, for electronic format documents, subject to Terms and Conditions for Electronic Documents at http://www.sgs.com/en/Terms-and-Conditions/Terms-e-Document.aspx. Attention is drawn to the limitation of liability, indemnification and jurisdiction issues defined therein. Any holder of this document is advised that information contained hereon reflects the Company's findings at the time of its intervention only and within the limits of Client's instructions, if any. The Company's sole responsibility is to its Client and this document does not exonerate parties to a transaction from exercising all their rights and obligations under the transaction documents. This document cannot be reproduced except in full, without prior written approval of the Company. Any unauthorized alteration, forgery or falsification of the content or appearance of this document is unlawful and offenders may be prosecuted to the fullest extent of the law. Unless otherwise stated the results shown in this test report refer only to the sample(s) tested .
Attention: To check the authenticity of testing /inspection report & certificate, please contact us at telephone: (86-755) 8307 1443, or email: CN.Doccheck@sgs.com

No.1177, Lingyun Road, Hi-Tech Zone, Ningbo, Zhejiang, China 315040 t E&E (86-574)89070249 www.sgsgroup.com.cn
中国·浙江·宁波高新区凌云路1177号 邮编: 315040 t HL (86-574)89070271 t ML (86-574)89070242 sgs.china@sgs.com

检测报告

编号: NGBEC2200697404　　日期: 2022年04月27日　　第1页,共13页

客户名称 :　浙江联和电子有限公司
客户地址 :　浙江省乐清市乐清湾港区乐商创业园

样品名称 :　PA66 连接器
型号 :　XHD-5A
客户参考信息 :　见附件
以上样品及信息由客户提供。

SGS工作编号 :　NP22-001952 - NB
样品接收日期 :　2022年04月21日
检测周期 :　2022年04月21日 - 2022年04月27日
检测要求 :　根据客户要求检测
检测方法 :　请参见下一页
检测结果 :　请参见下一页

检测结果概要 :

检测要求	结论
卤素	见检测结果
1907/2006/EC Reach 附录XVII第52条的修正指令552/2009/EC和第51条的修正法案(EU) 2018/2005-邻苯二甲酸盐(或酯)含量	符合
多环芳香烃(PAHs)	符合
多环芳香烃(PAHs)	符合
1907/2006/EC REACH 附录XVII的修正指令(EC) No 276/2010 第20条– 有机锡化合物	符合

通标标准技术服务有限公司宁波分公司
授权签名

scan to see the report

C501ECDB

Ashley Zhang张倩倩
批准签署人

Unless otherwise agreed in writing, this document is issued by the Company subject to its General Conditions of Service printed overleaf, available on request or accessible at http://www.sgs.com/en/Terms-and-Conditions.aspx and, for electronic format documents, subject to Terms and Conditions for Electronic Documents at http://www.sgs.com/en/Terms-and-Conditions/Terms-e-Document.aspx. Attention is drawn to the limitation of liability, indemnification and jurisdiction issues defined therein. Any holder of this document is advised that information contained hereon reflects the Company's findings at the time of its intervention only and within the limits of Client's instructions, if any. The Company's sole responsibility is to its Client and this document does not exonerate parties to a transaction from exercising all their rights and obligations under the transaction documents. This document cannot be reproduced except in full, without prior written approval of the Company. Any unauthorized alteration, forgery or falsification of the content or appearance of this document is unlawful and offenders may be prosecuted to the fullest extent of the law. Unless otherwise stated the results shown in this test report refer only to the sample(s) tested .
Attention: To check the authenticity of testing /inspection report & certificate, please contact us at telephone: (86-755) 8307 1443, or email: CN.Doccheck@sgs.com

No.1177, Lingyun Road, Hi-Tech Zone, Ningbo, Zhejiang, China 315040　t E&E (86-574)89070249　www.sgsgroup.com.cn
中国・浙江・宁波高新区凌云路1177号　邮编: 315040　t HL (86-574)89070271　t ML (86-574)89070242　sgs.china@sgs.com

检测结果 :

检测样品描述 :

样品编号	SGS样品ID	描述
SN1	NGB22-006974.001	白色塑料部分

备注：

(1) 1 mg/kg = 0.0001%
(2) MDL = 方法检测限
(3) ND = 未检出 (< MDL)
(4) "-" = 未规定

卤素

检测方法 : 参照EN 14582: 2016方法 测定，采用 IC进行分析。

检测项目	单位	MDL	001
氟 (F)	mg/kg	50	ND
氯 (Cl)	mg/kg	50	ND
溴 (Br)	mg/kg	50	ND
碘 (I)	mg/kg	50	ND

邻苯二甲酸酯

检测方法 : 参考CPSC-CH-C1001-09.3，用GC-MS分析。

检测项目	CAS NO.	限值	单位	MDL	001
邻苯二甲酸二异壬酯 (DINP)	28553-12-0/ 68515-48-0	0.06	%	0.005	ND
结论					**符合**

备注 :

(1) 根据客户要求，选取可接触部位进行检测

1907/2006/EC Reach附录XVII第52条的修正指令552/2009/EC和第51条的修正法案(EU) 2018/2005-邻苯二甲酸盐(或酯)含量

检测方法 : 参照EN 14372: 2004 的方法, 采用GC-MS进行分析.

Unless otherwise agreed in writing, this document is issued by the Company subject to its General Conditions of Service printed overleaf, available on request or accessible at http://www.sgs.com/en/Terms-and-Conditions.aspx and, for electronic format documents, subject to Terms and Conditions for Electronic Documents at http://www.sgs.com/en/Terms-and-Conditions/Terms-e-Document.aspx. Attention is drawn to the limitation of liability, indemnification and jurisdiction issues defined therein. Any holder of this document is advised that information contained hereon reflects the Company's findings at the time of its intervention only and within the limits of Client's instructions, if any. The Company's sole responsibility is to its Client and this document does not exonerate parties to a transaction from exercising all their rights and obligations under the transaction documents. This document cannot be reproduced except in full, without prior written approval of the Company. Any unauthorized alteration, forgery or falsification of the content or appearance of this document is unlawful and offenders may be prosecuted to the fullest extent of the law. Unless otherwise stated the results shown in this test report refer only to the sample(s) tested .
Attention: To check the authenticity of testing /inspection report & certificate, please contact us at telephone: (86-755) 8307 1443, or email: CN.Doccheck@sgs.com

No.1177, Lingyun Road, Hi-Tech Zone, Ningbo, Zhejiang, China 315040 t E&E (86-574)89070249 www.sgsgroup.com.cn
中国・浙江・宁波高新区凌云路1177号 邮编: 315040 t HL (86-574)89070271 t ML (86-574)89070242 sgs.china@sgs.com

检测项目	CAS NO.	限值	单位	MDL	001
与嘴部接触的玩具或儿童护理品					
邻苯二甲酸二异壬酯 (DINP)	28553-12-0/ 68515-48-0	-	%	0.010	ND
邻苯二甲酸二正辛酯 (DNOP)	117-84-0	-	%	0.003	ND
邻苯二甲酸二异癸酯 (DIDP)	26761-40-0 /68515-49-1	-	%	0.010	ND
合计(DINP+DNOP+DIDP)		0.1	%	-	ND
塑化材料					
邻苯二甲酸二丁酯 (DBP)	84-74-2	0.1	%	0.003	ND
邻苯二甲酸丁苄酯 (BBP)	85-68-7	0.1	%	0.003	ND
邻苯二甲酸二(2-乙基己基)酯 (DEHP)	117-81-7	0.1	%	0.003	ND
邻苯二甲酸二异丁酯(DIBP)	84-69-5	0.1	%	0.003	ND
合计(DBP+BBP+DEHP+DIBP)		0.1	%	-	ND
结论					**符合**

备注 :

(1)欧盟采用1907/2006/EC Reach 附录XVII的修正指令---552/2009/EC第51和52条(前身为2005/84/EC),
(1-1) 该指令禁止质量百分比超过0.1%的DBP, BBP和DEHP 用在儿童物品的任何玩具中.
(1-2) 该指令禁止质量百分比超过0.1%的DINP, DNOP和DIDP用在儿童可能吞咽的任何玩具中.
详细信息请参见Regulation (EC) No 552/2009

多环芳香烃(PAHs)

检测方法 : 参考AfPS GS 2019:01 PAK 方法检测，采用 GC-MS进行分析。

检测项目	单位	MDL	001
苯并(a)芘 (BaP)	mg/kg	0.1	ND
苯并(e)芘 (BeP)	mg/kg	0.1	ND
苯并(a)蒽 (BaA)	mg/kg	0.1	ND
苯并(b)荧蒽 (BbF)	mg/kg	0.1	ND
苯并(j)荧蒽 (BjF)	mg/kg	0.1	ND
苯并 (k)荧蒽 (BkF)	mg/kg	0.1	ND
䓛 (CHR)	mg/kg	0.1	ND

Unless otherwise agreed in writing, this document is issued by the Company subject to its General Conditions of Service printed overleaf, available on request or accessible at http://www.sgs.com/en/Terms-and-Conditions.aspx and, for electronic format documents, subject to Terms and Conditions for Electronic Documents at http://www.sgs.com/en/Terms-and-Conditions/Terms-e-Document.aspx. Attention is drawn to the limitation of liability, indemnification and jurisdiction issues defined therein. Any holder of this document is advised that information contained hereon reflects the Company's findings at the time of its intervention only and within the limits of Client's instructions, if any. The Company's sole responsibility is to its Client and this document does not exonerate parties to a transaction from exercising all their rights and obligations under the transaction documents. This document cannot be reproduced except in full, without prior written approval of the Company. Any unauthorized alteration, forgery or falsification of the content or appearance of this document is unlawful and offenders may be prosecuted to the fullest extent of the law. Unless otherwise stated the results shown in this test report refer only to the sample(s) tested .
Attention: To check the authenticity of testing /inspection report & certificate, please contact us at telephone: (86-755) 8307 1443, or email: CN.Doccheck@sgs.com

No.1177, Lingyun Road, Hi-Tech Zone, Ningbo, Zhejiang, China 315040 t E&E (86-574)89070249 www.sgsgroup.com.cn
中国・浙江・宁波高新区凌云路1177号 邮编: 315040 t HL (86-574)89070271 t ML (86-574)89070242 sgs.china@sgs.com

检测项目	单位	MDL	001
䓛 (CHR)	mg/kg	0.1	ND
二苯并(a,h)蒽(DBA)	mg/kg	0.1	ND
苯并(g,h,i)苝(二萘嵌苯) (BPE)	mg/kg	0.1	ND
茚苯(1,2,3-c,d)芘 (IPY)	mg/kg	0.1	ND
菲 (PHE)	mg/kg	0.1	ND
芘 (PYR)	mg/kg	0.1	ND
蒽 (ANT)	mg/kg	0.1	ND
荧蒽 (FLT)	mg/kg	0.1	ND
4项多环芳香烃总和[菲 (PHE),芘 (PYR),蒽 (ANT),荧蒽 (FLT)]	mg/kg	-	ND
萘 (NAP)	mg/kg	0.1	ND
15项多环芳香烃总和	mg/kg	-	ND
材料分类	-	-	2
结论			**符合**

备注：

根据客户提供的信息，检测样品为产品安全法涉及的非儿童使用产品（小于14岁）。

Unless otherwise agreed in writing, this document is issued by the Company subject to its General Conditions of Service printed overleaf, available on request or accessible at http://www.sgs.com/en/Terms-and-Conditions.aspx and, for electronic format documents, subject to Terms and Conditions for Electronic Documents at http://www.sgs.com/en/Terms-and-Conditions/Terms-e-Document.aspx. Attention is drawn to the limitation of liability, indemnification and jurisdiction issues defined therein. Any holder of this document is advised that information contained hereon reflects the Company's findings at the time of its intervention only and within the limits of Client's instructions, if any. The Company's sole responsibility is to its Client and this document does not exonerate parties to a transaction from exercising all their rights and obligations under the transaction documents. This document cannot be reproduced except in full, without prior written approval of the Company. Any unauthorized alteration, forgery or falsification of the content or appearance of this document is unlawful and offenders may be prosecuted to the fullest extent of the law. Unless otherwise stated the results shown in this test report refer only to the sample(s) tested .
Attention: To check the authenticity of testing /inspection report & certificate, please contact us at telephone: (86-755) 8307 1443, or email: CN.Doccheck@sgs.com

检验检测专用章 Inspection & Testing Services
SGS-CSTC Standards Technical Services (China) Co., Ltd. Ningbo Branch Chemical Laboratory

No.1177, Lingyun Road, Hi-Tech Zone, Ningbo, Zhejiang, China 315040 t E&E (86-574)89070249 www.sgsgroup.com.cn
中国·浙江·宁波高新区凌云路1177号 邮编: 315040 t HL (86-574)89070271 t ML (86-574)89070242 sgs.china@sgs.com

AfPS（德国产品安全委员会）:多环芳香烃的要求

参数（mg/kg）	1 类	2 类		3 类	
	设计意图为放入口中的材料，或与皮肤长期接触（超过 30 秒）的材料用于 -2009/48/EC 定义的玩具，或 -供3岁以下儿童[a,b]使用。	不属于第 1 类，设计意图或可预见[d]与皮肤长期接触（超过 30 秒）或短期重复接触[c]的材料		不属于第1和2类，设计意图或可预见与皮肤短期接触（不超过30秒）材料	
		a.供儿童使用的产品	b.其他产品	a.供儿童使用的产品	b.其他产品
苯并(a)芘 (BaP)	< 0.2	< 0.2	< 0.5	< 0.5	< 1
苯并(e)芘 (BeP)	< 0.2	< 0.2	< 0.5	< 0.5	< 1
苯并(a)蒽 (BaA)	< 0.2	< 0.2	< 0.5	< 0.5	< 1
苯并(b)荧蒽 (BbF)	< 0.2	< 0.2	< 0.5	< 0.5	< 1
苯并(j)荧蒽 (BjF)	< 0.2	< 0.2	< 0.5	< 0.5	< 1
苯并 (k)荧蒽 (BkF)	< 0.2	< 0.2	< 0.5	< 0.5	< 1
䓛 (CHR)	< 0.2	< 0.2	< 0.5	< 0.5	< 1
二苯并(a,h)蒽 (DBA)	< 0.2	< 0.2	< 0.5	< 0.5	< 1
苯并(g,h,i)苝(二萘嵌苯) (BPE)	< 0.2	< 0.2	< 0.5	< 0.5	< 1
茚苯(1,2,3-c,d)芘 (IPY)	< 0.2	< 0.2	< 0.5	< 0.5	< 1
菲 (PHE)，芘 (PYR)，蒽 (ANT)，荧蒽 (FLT)	< 1 （总和）	< 5 （总和）	< 10 （总和）	< 20（总和）	< 50 （总和）
萘 (NAP)	< 1	< 2		< 10	
15 PAH之和	<1	< 5	< 10	< 20	< 50

多环芳香烃(PAHs)

检测方法： 参考AfPS GS 2019:01 PAK 方法检测，采用 GC-MS进行分析。

检测项目	限值	单位	MDL	001
苯并 (a) 蒽 (BaA)	1	mg/kg	0.1	ND
䓛 (CHR)	1	mg/kg	0.1	ND
苯并 (b) 荧蒽 (BbF)	1	mg/kg	0.1	ND
苯并 (j) 荧蒽 (BjF)	1	mg/kg	0.1	ND
苯并 (k) 荧蒽 (BkF)	1	mg/kg	0.1	ND
苯并 (e) 芘 (BeP)	1	mg/kg	0.1	ND
苯并 (a) 芘 (BaP)	1	mg/kg	0.1	ND

Unless otherwise agreed in writing, this document is issued by the Company subject to its General Conditions of Service printed overleaf, available on request or accessible at http://www.sgs.com/en/Terms-and-Conditions.aspx and, for electronic format documents, subject to Terms and Conditions for Electronic Documents at http://www.sgs.com/en/Terms-and-Conditions/Terms-e-Document.aspx. Attention is drawn to the limitation of liability, indemnification and jurisdiction issues defined therein. Any holder of this document is advised that information contained hereon reflects the Company's findings at the time of its intervention only and within the limits of Client's instructions, if any. The Company's sole responsibility is to its Client and this document does not exonerate parties to a transaction from exercising all their rights and obligations under the transaction documents. This document cannot be reproduced except in full, without prior written approval of the Company. Any unauthorized alteration, forgery or falsification of the content or appearance of this document is unlawful and offenders may be prosecuted to the fullest extent of the law. Unless otherwise stated the results shown in this test report refer only to the sample(s) tested .
Attention: To check the authenticity of testing /inspection report & certificate, please contact us at telephone: (86-755) 8307 1443, or email: CN.Doccheck@sgs.com
SGS-CSTC Standards Technical Services Co., Ltd. Ningbo Branch Chemical Laboratory
No.1177, Lingyun Road, Hi-Tech Zone, Ningbo, Zhejiang, China 315040 t E&E (86-574)89070249 www.sgsgroup.com.cn
中国·浙江·宁波高新区凌云路1177号 邮编: 315040 t HL (86-574)89070271 t ML (86-574)89070242 sgs.china@sgs.com
Member of the SGS Group (SGS SA)

检测项目	限值	单位	MDL	001
二苯并 (a, h) 蒽 (DBA)	1	mg/kg	0.1	ND
结论				**符合**

1907/2006/EC REACH附录XVII的修正指令(EC) No 276/2010第20条– 有机锡化合物

检测方法 : 参照ISO 17353: 2004 方法测定, 采用 GC-MS进行分析.

检测项目	限值	单位	MDL	001
三丁基锡 (TBT)以锡计	-	%	0.01	ND
三苯基一氯代锡(TPT)以锡	-	%	0.01	ND
三丙基锡(TPrT)以锡计	-	%	0.01	ND
三环己基锡 (TCyT)以锡计	-	%	0.01	ND
三辛基锡(TOT)以锡计	-	%	0.01	ND
三甲基锡(TMT)以锡计	-	%	0.01	ND
三取代有机锡化合物之和* (以锡计)	0.1	%	-	ND
二丁基锡(DBT)化合物(以锡计)	0.1	%	0.01	ND
二辛基锡(DOT)化合物(以锡计)	0.1	%	0.01	ND
结论				**符合**

除非另有说明，参照ILAC-G8:09/2019，使用简单接受（w=0）的二元判定规则进行符合性判定。
除非另有说明，此报告结果仅对检测的样品负责。本报告未经本公司书面许可，不可部分复制。
检测报告仅用于客户科研、教学、内部质量控制、产品研发等目的，仅供内部参考。

Unless otherwise agreed in writing, this document is issued by the Company subject to its General Conditions of Service printed overleaf, available on request or accessible at http://www.sgs.com/en/Terms-and-Conditions.aspx and, for electronic format documents, subject to Terms and Conditions for Electronic Documents at http://www.sgs.com/en/Terms-and-Conditions/Terms-e-Document.aspx. Attention is drawn to the limitation of liability, indemnification and jurisdiction issues defined therein. Any holder of this document is advised that information contained hereon reflects the Company's findings at the time of its intervention only and within the limits of Client's instructions, if any. The Company's sole responsibility is to its Client and this document does not exonerate parties to a transaction from exercising all their rights and obligations under the transaction documents. This document cannot be reproduced except in full, without prior written approval of the Company. Any unauthorized alteration, forgery or falsification of the content or appearance of this document is unlawful and offenders may be prosecuted to the fullest extent of the law. Unless otherwise stated the results shown in this test report refer only to the sample(s) tested .
Attention: To check the authenticity of testing /inspection report & certificate, please contact us at telephone: (86-755) 8307 1443, or email: CN.Doccheck@sgs.com

SGS-CSTC Standards Technical Services Co., Ltd. Ningbo Branch Chemical Laboratory
No.1177, Lingyun Road, Hi-Tech Zone, Ningbo, Zhejiang, China 315040 t E&E (86-574)89070249 www.sgsgroup.com.cn
中国・浙江・宁波高新区凌云路1177号 邮编: 315040 t HL (86-574)89070271 t ML (86-574)89070242 sgs.china@sgs.com

附件:
XH , 1.0, SH, SHD, 1.25, 51021, DF14, DF13, GH, ZH, PH, PHB, PA, PHSD, DF11, C1251, 51047, 51146, FI-S, PHD, YHD200, PA, SMP, SMW, SMH, SMH200, SMH200-H, YH200, 20039WR, 杜邦2.0, XH/TJC3, XA, HA, XHB, XHD, XHE, EH, EI, 小四P, 5263, 5264, 5267, 5268, SZN, SAN, SCN, SCND, JC15, JC20, JC25, 5102, 5240, SMH250, SMP250, SMW250, 25048HS, 25045HP, SM, TJC8, 杜邦2.54, TJC8A, 杜邦带锁, TJC8B, TJC8H, 5051, 2510, 美尚美, 43640, 43645, 43020, 43025, 5500, 5600, VH, VHRR, YH396, VHR, 35156, 2139, 3.96, 90331, 5195, 5196, 39612, FL, 5557, 5559, 5566, 5569, SL, RV42, EL, YL, 小EL, 8981, 大四P, 5058, 5.08, L6.2, VL, VLP/VLR, TJC2, TJC2A, TJC2B, TJC4, TJC1, 1806, MX3.0, 1.58, 51005, 51006, BH3.5, BH4.0, 63080, 51004, TJC15, A4203, CL014, OTP, MKH, SMF, Cy-X201, 35108, 35150, 35151, 35224, 35180, 35965, 42021, 42022, 42002, 35955, SA, SCS, 35189, 35196, CH10, CH2.5, 543, SLP, SLR, YHL500, YWL500, FFC, FPC, 20030, 250, LGC, S11, YH025, 35155, 25415, 5197, 5198, 110, 2.8, 6.3, SCS
NH, XHQ, 42474, 42475, QH, NV, 50300, 50301, 5025, 3191, 5199, STV5, YHL500, YWL500, F001, F002, D440, D600, D620, D700, D220, D230, D250, D480, D520, D280, D630, D430, D400, D450, U-T, F1001-T, SIN-T, 774, 773, 778, 294, TU-JTK(SV), TU(SNB), TO-JTK(RV), MDD, FDD, TG-JT, IDC, AUTO, CONNECTOR, DJ70, DT04, DT06, UY/K1, UY2/K2, UR/K3, UR2, UB/K4, UB2A, UG/K5, U1R/K8, U1B/K9, HJKT10, UDW2, 314, A5001, A5002, MC100, FPC2.54, SGN, PHR, ZHR, 205, 5.2, C1801, C1802, 2060, A5003, ME020, ME010, FPC/FFC, B2541, 1971845, 1971846, 2232043, 2232044, 2232511, 1971895, 1971896, JWPF, SY, Molex1.5, ME0100, RAST, A5004, DV, SJN, SDN, 35182, 35524, RCY, LC, VR, SHJ, SHL, DF19, ACH, IL-Z, SATA, XSR, SUR, SUH, ZE, ZND, ZPD, SFH, PUD, AMP2.0, 35507, DF3, PND, RE, RA, RF, SYP/SYR, HIF3, MC100/ME020/ME010, F2541, A5005, A5006, A5007, A2509, A25010, A25011, A25012, B13001, B76201, VHB, VHC, VHD
1969738, 1969740, 1971845, 1971846, 1971895, 1971896, 1971946 thru 1971949, 1971954 thru 1971957, 2232008 thru 2232011, 2232000 thru 2232003, 2232016 thru 2232019, 1971962 thru 1971965, 2232024 thru 2232027, 2232289 thru 2232292, 2232043 thru 2232074, 2232298 thru 2232301, 2232511, 2232532, 2232557, 2232559, 2232560, 2232562, 2232563, 2232565, 2232566, 2232568, 2232569, 2232571, 2232572, 2232574, 2232575, 2232577, 2232578, 2232580, 2232581, 2232583, 2232584, 2232586, 2232587, 2232589, 2232590, 2232592, 2232593, 2232595, 2232596, 2232598, 2232599, 2232601, 2232602, 2232604, 2232605, 2232607, 2232608, 2232611 thru 2232682, 2292457, 2292458,
1064, 2064, 3064, 1080, 2080, 3080, 1100, 2100, 3100, 1120, 2120, 3120, 1150, 2150, 3150,
1180, 2180, 3180, 1230, 2230, 3230, 1250, 2250, 3250, 1280, 2280, 3280, 1300, 2300, 3300, 1480, 2480, 3480,
1630, 2630, 3630, 1780, 2780, 3780, 1950, 2950, 3950, 1010, 2010, 3010, 1013, 2013, 3013, 1015, 2015, 3015,
1016, 2016, 3016, 1025, 2025, 3025, 1035, 2035, 3035, 1045, 2045, 3045, 1058, 2058, 3058, 1999, 2999, 3999,
401, 402, 403, 503, TPA, BX
A1001 A1002 A1003 A1004 A1005 A1006 A1007 A1008 A1009 A1251 A1252 A1253 A1254
A1255 A1256 A1257 A1258 A1259 A1501 A1502 A1503 A1504 A1505 A1506 A1507 A1508
A1509 A2001 A2002 A2003 A2004 A2005 A2006 A2007 A2008 A2009 A2010 A2011 A2012
A2013 A2014 A2015 A2016 A2017 A2018 A2501 A2502 A2503 A2504 A2505 A2506 A2507
A2508 A2509 A25010 A25011 A25012 A25013 A25014 A25015 A25016 A25017 A25018 A2541 A2542
A2543 A2544 A2545 A2546 A2547 A2548 A2549 A3001 A3002 A3003 A3004 A3005 A3006
A3007 A3008 A3009 A3301 A3302 A3303 A3304 A3305 A3306 A3307 A3308 A3309 A3961
A3962 A3963 A3964 A3965 A3966 A3967 A3968 A3969 A4201 A4202 A4203 A4204 A4205
A4206 A4207 A4208 A4209 A5001 A5002 A5003 A5004 A5005 A5006 A5007 A5008 A5009
A5081 A5082 A5083 A5084 A5085 A5086 A5087 A5088 A5089 A6501 A6502 A6503 A6504
A6505 A6506 A6507 A6508 A6509 B1251 B1252 B1253 B1254 B1255 B1256 B1257 B1258
B1259 B1501 B1502 B1503 B1504 B1505 B1506 B1507 B1508 B1509 B2001 B2002 B2003
B2004 B2005 B2006 B2007 B2008 B2009 B2501 B2502 B2503 B2504 B2505 B2506 B2507

检验检测专用章 Inspection & Testing Services
SGS-CSTC Standards Technical Services Co., Ltd. Ningbo Branch Chemical Laboratory

Unless otherwise agreed in writing, this document is issued by the Company subject to its General Conditions of Service printed overleaf, available on request or accessible at http://www.sgs.com/en/Terms-and-Conditions.aspx and, for electronic format documents, subject to Terms and Conditions for Electronic Documents at http://www.sgs.com/en/Terms-and-Conditions/Terms-e-Document.aspx. Attention is drawn to the limitation of liability, indemnification and jurisdiction issues defined therein. Any holder of this document is advised that information contained hereon reflects the Company's findings at the time of its intervention only and within the limits of Client's instructions, if any. The Company's sole responsibility is to its Client and this document does not exonerate parties to a transaction from exercising all their rights and obligations under the transaction documents. This document cannot be reproduced except in full, without prior written approval of the Company. Any unauthorized alteration, forgery or falsification of the content or appearance of this document is unlawful and offenders may be prosecuted to the fullest extent of the law. Unless otherwise stated the results shown in this test report refer only to the sample(s) tested .
Attention: To check the authenticity of testing /inspection report & certificate, please contact us at telephone: (86-755) 8307 1443, or email: CN.Doccheck@sgs.com
No.1177, Lingyun Road, Hi-Tech Zone, Ningbo, Zhejiang, China 315040 t E&E (86-574)89070249 www.sgsgroup.com.cn
中国·浙江·宁波高新区凌云路1177号 邮编: 315040 t HL (86-574)89070271 t ML (86-574)89070242 sgs.china@sgs.com

B2508 B2509 B2541 B2542 B2543 B2544 B2545 B2546 B2547 B2548 B2549 B76201 B76202
B76203 B76204 B76205 B76206 B76207 B76208 B76209 B13001 B13002 B13003 B13004
B13005 B13006 B13007 B13008 B13009 C01581 C01582 C01583 C01584 C01585 C01586 C01587
C01588 C01589 C1251 C1252 C1253 C1254 C1255 C1256 C1257 C1258 C1259 C1501 C1502
C1503 C1504 C1505 C1506 C1507 C1508 C1509 C2001 C2002 C2003 C2004 C2005
C2006 C2007 C2008 C2009 C2501 C2502 C2503 C2504 C2505 C2506 C2507 C2508
C2509 C25010 C25011 C25012 C25013 C25014 C25015 C25016 C25017 C25018 C2541 C2542
C2543 C2544 C2545 C2546 C2547 C2548 C2549 C3001 C3002 C3003 C3004 C3005
C3006 C3007 C3008 C3009 C3501 C3502 C3503 C3504 C3505 C3506 C3507 C3508
C3509 C3681 C3682 C3683 C3684 C3685 C3686 C3687 C3688 C3689 C3961 C3962
C3963 C3964 C3965 C3966 C3967 C3968 C3969
C4001 C4002 C4003 C4004 C4005 C4006 C4007 C4008 C4009 C4141 C4142 C4143 C4144
C4145 C4146 C4147 C4148 C4149 C4201 C4202 C4203 C4204 C4205 C4206 C4207 C4208
C4209 C4501 C4502 C4503 C4504 C4505 C4506 C4507 C4508 C4509 C5001 C5002 C5003
C5004 C5005 C5006 C5007 C5008 C5009 C6201 C6202 C6203 C6204 C6205 C6206 C6207
C6208 C6209 C6351 C6352 C6353 C6354 C6355 C6356 C6357 C6358 C6359 D2801 D2802
D2803 D2804 D2805 D2806 D2807 D2808 D2809 D4801 D4802 D4803 D4804 D4805 D4806
D4807 D4808 D4809 D5201 D5202 D5203 D5204 D5205 D5206 D5207 D5208 D5209 D6301
D6302 D6303 D6304 D6305 D6306 D6307 D6308 D6309 D6201 D6202 D6203 D6204 D6205
D6206 D6207 D6208 D6209 D7001 D7002 D7003 D7004 D7005 D7006 D7007 D7008 D7009
F0501 F0502 F0503 F0504 F0505 F0506 F0507 F0508 F0509 F05010 F05011 F05012
F05013 F05014 F05015 F05016 F05017 F05018 F1001 F1002 F1003 F1004 F1005 F1006 F1007
F1008 F1009 F10010 F10011 F10012 F10013 F10014 F10015 F10016 F10017 F10018 F2541 F2542
F2543 F2544 F2545 F2546 F2547 F2548 F2549 P0001 P0002 P0003 P0004 P0005 P0006
P0007 P0008 P0009 P0010 P0011 P0012 P0013 P0014 P0015 P0016 P0017 P0018 P0019
P0020 P0021 P0022 P0023 P0024 P0025 P0026 P0027 D2301 D2302 D2303 D2304 D2305
D2306 D2307 D2308 D2309 D6001 D6002 D6003 D6004 D6005 D6006 D6007 D6008 D6009
D2201 D2202 D2203 D2204 D2205 D2206 D2207 D2208 D2209

Unless otherwise agreed in writing, this document is issued by the Company subject to its General Conditions of Service printed overleaf, available on request or accessible at http://www.sgs.com/en/Terms-and-Conditions.aspx and, for electronic format documents, subject to Terms and Conditions for Electronic Documents at http://www.sgs.com/en/Terms-and-Conditions/Terms-e-Document.aspx. Attention is drawn to the limitation of liability, indemnification and jurisdiction issues defined therein. Any holder of this document is advised that information contained hereon reflects the Company's findings at the time of its intervention only and within the limits of Client's instructions, if any. The Company's sole responsibility is to its Client and this document does not exonerate parties to a transaction from exercising all their rights and obligations under the transaction documents. This document cannot be reproduced except in full, without prior written approval of the Company. Any unauthorized alteration, forgery or falsification of the content or appearance of this document is unlawful and offenders may be prosecuted to the fullest extent of the law. Unless otherwise stated the results shown in this test report refer only to the sample(s) tested .
Attention: To check the authenticity of testing /inspection report & certificate, please contact us at telephone: (86-755) 8307 1443, or email: CN.Doccheck@sgs.com

SGS-CSTC Standards Technical Services Co., Ltd. Ningbo Branch Chemical Laboratory
No.1177, Lingyun Road, Hi-Tech Zone, Ningbo, Zhejiang, China 315040 t E&E (86-574)89070249 www.sgsgroup.com.cn
中国·浙江·宁波高新区凌云路1177号 邮编: 315040 t HL (86-574)89070271 t ML (86-574)89070242 sgs.china@sgs.com

附件

Phthalates 测试流程图

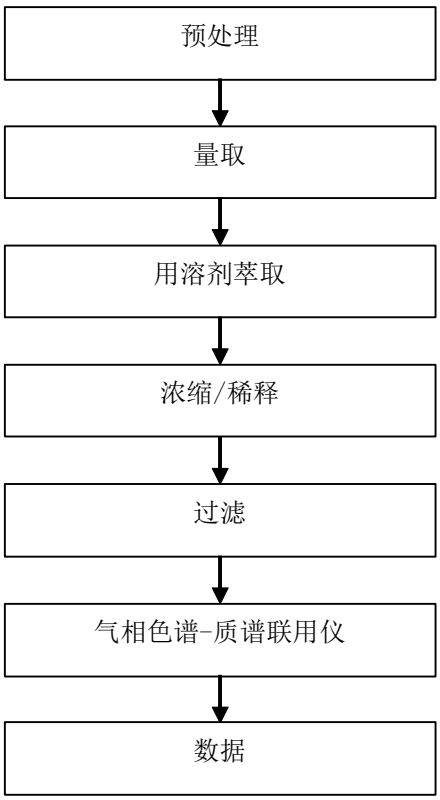

Unless otherwise agreed in writing, this document is issued by the Company subject to its General Conditions of Service printed overleaf, available on request or accessible at http://www.sgs.com/en/Terms-and-Conditions.aspx and, for electronic format documents, subject to Terms and Conditions for Electronic Documents at http://www.sgs.com/en/Terms-and-Conditions/Terms-e-Document.aspx. Attention is drawn to the limitation of liability, indemnification and jurisdiction issues defined therein. Any holder of this document is advised that information contained hereon reflects the Company's findings at the time of its intervention only and within the limits of Client's instructions, if any. The Company's sole responsibility is to its Client and this document does not exonerate parties to a transaction from exercising all their rights and obligations under the transaction documents. This document cannot be reproduced except in full, without prior written approval of the Company. Any unauthorized alteration, forgery or falsification of the content or appearance of this document is unlawful and offenders may be prosecuted to the fullest extent of the law. Unless otherwise stated the results shown in this test report refer only to the sample(s) tested .
Attention: To check the authenticity of testing /inspection report & certificate, please contact us at telephone: (86-755) 8307 1443, or email: CN.Doccheck@sgs.com

SGS-CSTC Standards Technical Services Co., Ltd. Ningbo Branch Chemical Laboratory
No.1177, Lingyun Road, Hi-Tech Zone, Ningbo, Zhejiang, China 315040 t E&E (86-574)89070249 www.sgsgroup.com.cn
中国·浙江·宁波高新区凌云路1177号 邮编: 315040 t HL (86-574)89070271 t ML (86-574)89070242 sgs.china@sgs.com

附件

Halogen(氧弹法)测试流程图

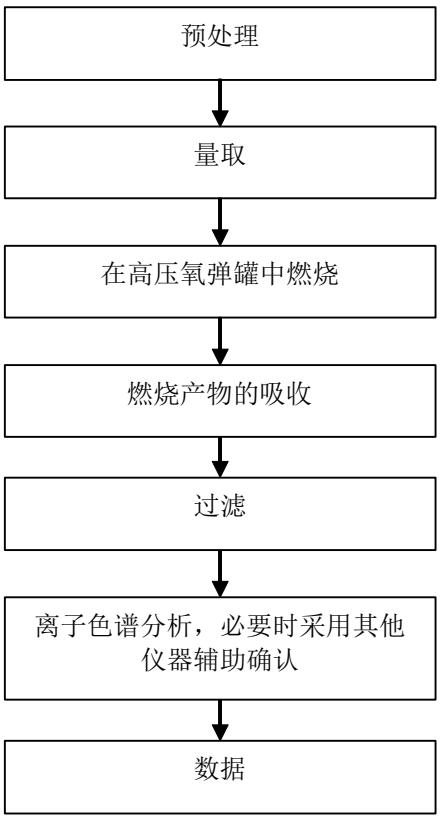

Unless otherwise agreed in writing, this document is issued by the Company subject to its General Conditions of Service printed overleaf, available on request or accessible at http://www.sgs.com/en/Terms-and-Conditions.aspx and, for electronic format documents, subject to Terms and Conditions for Electronic Documents at http://www.sgs.com/en/Terms-and-Conditions/Terms-e-Document.aspx. Attention is drawn to the limitation of liability, indemnification and jurisdiction issues defined therein. Any holder of this document is advised that information contained hereon reflects the Company's findings at the time of its intervention only and within the limits of Client's instructions, if any. The Company's sole responsibility is to its Client and this document does not exonerate parties to a transaction from exercising all their rights and obligations under the transaction documents. This document cannot be reproduced except in full, without prior written approval of the Company. Any unauthorized alteration, forgery or falsification of the content or appearance of this document is unlawful and offenders may be prosecuted to the fullest extent of the law. Unless otherwise stated the results shown in this test report refer only to the sample(s) tested .
Attention: To check the authenticity of testing /inspection report & certificate, please contact us at telephone: (86-755) 8307 1443, or email: CN.Doccheck@sgs.com

SGS-CSTC Standards Technical Services Co., Ltd. Ningbo Branch Chemical Laboratory
No.1177, Lingyun Road, Hi-Tech Zone, Ningbo, Zhejiang, China 315040 t E&E (86-574)89070249 www.sgsgroup.com.cn
中国·浙江·宁波高新区凌云路1177号 邮编: 315040 t HL (86-574)89070271 t ML (86-574)89070242 sgs.china@sgs.com

附件

PAHs 测试流程图

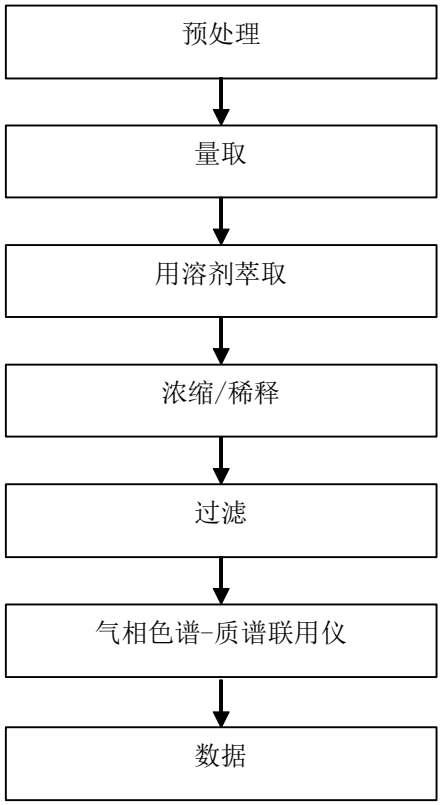

Unless otherwise agreed in writing, this document is issued by the Company subject to its General Conditions of Service printed overleaf, available on request or accessible at http://www.sgs.com/en/Terms-and-Conditions.aspx and, for electronic format documents, subject to Terms and Conditions for Electronic Documents at http://www.sgs.com/en/Terms-and-Conditions/Terms-e-Document.aspx. Attention is drawn to the limitation of liability, indemnification and jurisdiction issues defined therein. Any holder of this document is advised that information contained hereon reflects the Company's findings at the time of its intervention only and within the limits of Client's instructions, if any. The Company's sole responsibility is to its Client and this document does not exonerate parties to a transaction from exercising all their rights and obligations under the transaction documents. This document cannot be reproduced except in full, without prior written approval of the Company. Any unauthorized alteration, forgery or falsification of the content or appearance of this document is unlawful and offenders may be prosecuted to the fullest extent of the law. Unless otherwise stated the results shown in this test report refer only to the sample(s) tested .
Attention: To check the authenticity of testing /inspection report & certificate, please contact us at telephone: (86-755) 8307 1443, or email: CN.Doccheck@sgs.com

SGS-CSTC Standards Technical Services Co., Ltd. Ningbo Branch Chemical Laboratory
No.1177, Lingyun Road, Hi-Tech Zone, Ningbo, Zhejiang, China 315040 t E&E (86-574)89070249 www.sgsgroup.com.cn
中国·浙江·宁波高新区凌云路1177号 邮编: 315040 t HL (86-574)89070271 t ML (86-574)89070242 sgs.china@sgs.com

附件

Organotin 测试流程图

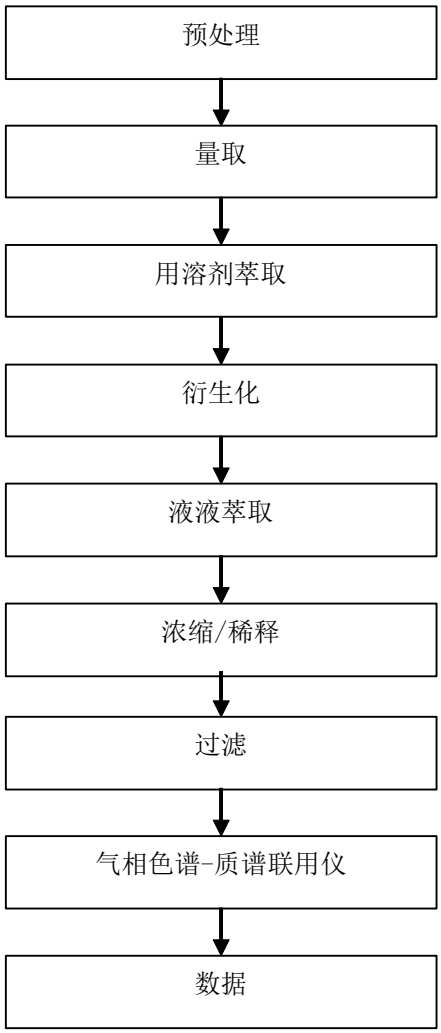

Unless otherwise agreed in writing, this document is issued by the Company subject to its General Conditions of Service printed overleaf, available on request or accessible at http://www.sgs.com/en/Terms-and-Conditions.aspx and, for electronic format documents, subject to Terms and Conditions for Electronic Documents at http://www.sgs.com/en/Terms-and-Conditions/Terms-e-Document.aspx. Attention is drawn to the limitation of liability, indemnification and jurisdiction issues defined therein. Any holder of this document is advised that information contained hereon reflects the Company's findings at the time of its intervention only and within the limits of Client's instructions, if any. The Company's sole responsibility is to its Client and this document does not exonerate parties to a transaction from exercising all their rights and obligations under the transaction documents. This document cannot be reproduced except in full, without prior written approval of the Company. Any unauthorized alteration, forgery or falsification of the content or appearance of this document is unlawful and offenders may be prosecuted to the fullest extent of the law. Unless otherwise stated the results shown in this test report refer only to the sample(s) tested .
Attention: To check the authenticity of testing /inspection report & certificate, please contact us at telephone: (86-755) 8307 1443, or email: CN.Doccheck@sgs.com

No.1177, Lingyun Road, Hi-Tech Zone, Ningbo, Zhejiang, China 315040 t E&E (86-574)89070249 www.sgsgroup.com.cn
中国·浙江·宁波高新区凌云路1177号 邮编: 315040 t HL (86-574)89070271 t ML (86-574)89070242 sgs.china@sgs.com

样品照片:

NGB22-006974.001

此照片仅限于随SGS正本报告使用

*** 报告完 ***

Unless otherwise agreed in writing, this document is issued by the Company subject to its General Conditions of Service printed overleaf, available on request or accessible at http://www.sgs.com/en/Terms-and-Conditions.aspx and, for electronic format documents, subject to Terms and Conditions for Electronic Documents at http://www.sgs.com/en/Terms-and-Conditions/Terms-e-Document.aspx. Attention is drawn to the limitation of liability, indemnification and jurisdiction issues defined therein. Any holder of this document is advised that information contained hereon reflects the Company's findings at the time of its intervention only and within the limits of Client's instructions, if any. The Company's sole responsibility is to its Client and this document does not exonerate parties to a transaction from exercising all their rights and obligations under the transaction documents. This document cannot be reproduced except in full, without prior written approval of the Company. Any unauthorized alteration, forgery or falsification of the content or appearance of this document is unlawful and offenders may be prosecuted to the fullest extent of the law. Unless otherwise stated the results shown in this test report refer only to the sample(s) tested .
Attention: To check the authenticity of testing /inspection report & certificate, please contact us at telephone: (86-755) 8307 1443, or email: CN.Doccheck@sgs.com

SGS-CSTC Standards Technical Services Co., Ltd. Ningbo Branch Chemical Laboratory
No.1177, Lingyun Road, Hi-Tech Zone, Ningbo, Zhejiang, China 315040 t E&E (86-574)89070249 www.sgsgroup.com.cn
中国·浙江·宁波高新区凌云路1177号 邮编: 315040 t HL (86-574)89070271 t ML (86-574)89070242 sgs.china@sgs.com

检测报告

编号: NGBEC2200904704　　日期: 2022年05月17日　　第1页,共7页

客户名称 :　浙江联和电子有限公司

客户地址 :　浙江省乐清市乐清湾港区创新路8号

样品名称 :　端子 针

客户参考信息 :　见附件

以上样品及信息由客户提供。

SGS工作编号 :	NP22-002236 - NB
样品接收日期 :	2022年05月07日
检测周期 :	2022年05月07日 - 2022年05月17日
检测要求 :	根据客户要求检测
检测方法 :	请参见下一页
检测结果 :	请参见下一页
结论 :	基于所送样品进行的检测，镉、铅、汞、六价铬的检测结果符合欧盟RoHS指令2011/65/EU附录II的修正指令(EU) 2015/863的限值要求。

通标标准技术服务有限公司宁波分公司
授权签名

scan to see the report

C32B7C43

Ashley Zhang张倩倩
批准签署人

Unless otherwise agreed in writing, this document is issued by the Company subject to its General Conditions of Service printed overleaf, available on request or accessible at http://www.sgs.com/en/Terms-and-Conditions.aspx and, for electronic format documents, subject to Terms and Conditions for Electronic Documents at http://www.sgs.com/en/Terms-and-Conditions/Terms-e-Document.aspx. Attention is drawn to the limitation of liability, indemnification and jurisdiction issues defined therein. Any holder of this document is advised that information contained hereon reflects the Company's findings at the time of its intervention only and within the limits of Client's instructions, if any. The Company's sole responsibility is to its Client and this document does not exonerate parties to a transaction from exercising all their rights and obligations under the transaction documents. This document cannot be reproduced except in full, without prior written approval of the Company. Any unauthorized alteration, forgery or falsification of the content or appearance of this document is unlawful and offenders may be prosecuted to the fullest extent of the law. Unless otherwise stated the results shown in this test report refer only to the sample(s) tested .
Attention: To check the authenticity of testing /inspection report & certificate, please contact us at telephone: (86-755) 8307 1443, or email: CN.Doccheck@sgs.com

No.1177, Lingyun Road, Hi-Tech Zone, Ningbo, Zhejiang, China 315040　t E&E (86-574)89070249　www.sgsgroup.com.cn
中国・浙江・宁波高新区凌云路1177号　邮编: 315040　t HL (86-574)89070271　t ML (86-574)89070242　sgs.china@sgs.com

检测结果：

检测样品描述：

样品编号	SGS样品ID	描述
SN1	NGB22-009047.001	银色金属

备注：

(1) 1 mg/kg = 0.0001%
(2) MDL = 方法检测限
(3) ND = 未检出 (< MDL)
(4) "-" = 未规定

RoHS指令2011/65/EU附录II的修正指令(EU) 2015/863

检测方法： 参考IEC 62321-4:2013+AMD1:2017, IEC 62321-5:2013 和 IEC 62321-7-1:2015, 采用ICP-OES和UV-Vis 进行分析.

检测项目	限值	单位	MDL	*001*
镉 (Cd)	100	mg/kg	2	ND
铅(Pb)	1000	mg/kg	2	5
汞 (Hg)	1000	mg/kg	2	ND
六价铬(Cr(VI))▾	-	μg/cm²	0.10	ND

备注：

(1) 最大允许极限值引用自RoHS指令(EU) 2015/863。
(2) IEC 62321系列等同于 EN 62321系列
https://www.cenelec.eu/dyn/www/f?p=104:30:1742232870351101::::FSP_ORG_ID,FSP_LANG_ID:1258637,25
(3) ▾ = a. 当六价铬的浓度高于0.13 μg/cm2时，样品为阳性，即含有六价铬；
b. 当六价铬的浓度为ND(低于0.10 μg/cm2)时，样品为阴性，即未检测到六价铬；
c. 当六价铬的浓度介于0.10 μg/cm2与0.13 μg/cm2之间时，无法直接判定是否检测到六价铬，因不同个体的样品表面差异可能会影响测定结果；
由于未获知样品的存储条件和生产日期，样品的六价铬测试结果仅能代表测试时样品含六价铬的状态。
除非另有说明，参照ILAC-G8:09/2019，使用简单接受（w=0）的二元判定规则进行符合性判定。
除非另有说明，此报告结果仅对检测的样品负责。本报告未经本公司书面许可，不可部分复制。
检测报告仅用于客户科研、教学、内部质量控制、产品研发等目的，仅供内部参考。

Unless otherwise agreed in writing, this document is issued by the Company subject to its General Conditions of Service printed overleaf, available on request or accessible at http://www.sgs.com/en/Terms-and-Conditions.aspx and, for electronic format documents, subject to Terms and Conditions for Electronic Documents at http://www.sgs.com/en/Terms-and-Conditions/Terms-e-Document.aspx. Attention is drawn to the limitation of liability, indemnification and jurisdiction issues defined therein. Any holder of this document is advised that information contained hereon reflects the Company's findings at the time of its intervention only and within the limits of Client's instructions, if any. The Company's sole responsibility is to its Client and this document does not exonerate parties to a transaction from exercising all their rights and obligations under the transaction documents. This document cannot be reproduced except in full, without prior written approval of the Company. Any unauthorized alteration, forgery or falsification of the content or appearance of this document is unlawful and offenders may be prosecuted to the fullest extent of the law. Unless otherwise stated the results shown in this test report refer only to the sample(s) tested .
Attention: To check the authenticity of testing /inspection report & certificate, please contact us at telephone: (86-755) 8307 1443, or email: CN.Doccheck@sgs.com

SGS-CSTC Standards Technical Services Co., Ltd. Ningbo Branch Chemical Laboratory
No.1177, Lingyun Road, Hi-Tech Zone, Ningbo, Zhejiang, China 315040 t E&E (86-574)89070249 www.sgsgroup.com.cn
中国・浙江・宁波高新区凌云路1177号 邮编: 315040 t HL (86-574)89070271 t ML (86-574)89070242 sgs.china@sgs.com

附件:
XH , 1.0, SH, SHD, 1.25, 51021, DF14, DF13, GH, ZH, PH, PHB, PA, PHSD, DF11, C1251, 51047, 51146, FI-S, PHD, YHD200, PA, SMP, SMW, SMH, SMH200, SMH200-H, YH200, 20039WR, 杜邦2.0, XH/TJC3, XA, HA, XHB, XHD, XHE, EH, EI, 小四P, 5263, 5264, 5267, 5268, SZN, SAN, SCN, SCND, JC15, JC20, JC25, 5102, 5240, SMH250, SMP250, SMW250, 25048HS, 25045HP, SM, TJC8, 杜邦2.54, TJC8A, 杜邦带锁, TJC8B, TJC8H, 5051, 2510, 美尚美, 43640, 43645, 43020, 43025, 5500, 5600, VH, VHRR, YH396, VHR, 35156, 2139, 3.96, 90331, 5195, 5196, 39612, FL, 5557, 5559, 5566, 5569, SL, RV42, EL, YL, 小EL, 8981, 大四P, 5058, 5.08, L6.2, VL, VLP/VLR, TJC2, TJC2A, TJC2B, TJC4, TJC1, 1806, MX3.0, 1.58, 51005, 51006, BH3.5, BH4.0, 63080, 51004, TJC15, A4203, CL014, OTP, MKH, SMF, Cy-X201, 35108, 35150, 35151, 35224, 35180, 35965, 42021, 42022, 42002, 35955, SA, SCS, 35189, 35196, CH10, CH2.5, 543, SLP, SLR, YHL500, YWL500, FFC, FPC, 20030, 250, LGC, S11, YH025, 35155, 25415, 5197, 5198, 110, 2.8, 6.3, SCS
NH, XHQ, 42474, 42475, QH, NV, 50300, 50301, 5025, 3191, 5199, STV5, YHL500, YWL500, F001, F002, D440, D600, D620, D700, D220, D230, D250, D480, D520, D280, D630, D430, D400, D450, U-T, F1001-T, SIN-T, 774, 773, 778, 294, TU-JTK(SV), TU(SNB), TO-JTK(RV), MDD, FDD, TG-JT, IDC, AUTO, CONNECTOR, DJ70, DT04, DT06, UY/K1, UY2/K2, UR/K3, UR2, UB/K4, UB2A, UG/K5, U1R/K8, U1B/K9, HJKT10, UDW2, 314, A5001, A5002, MC100, FPC2.54, SGN, PHR, ZHR, 205, 5.2, C1801, C1802, 2060, A5003, ME020, ME010, FPC/FFC, B2541, 1971845, 1971846, 2232043, 2232044, 2232511, 1971895, 1971896, JWPF, SY, Molex1.5, ME0100, RAST, A5004, DV, SJN, SDN, 35182, 35524, RCY, LC, VR, SHJ, SHL, DF19, ACH, IL-Z, SATA, XSR, SUR, SUH, ZE, ZND, ZPD, SFH, PUD, AMP2.0, 35507, DF3, PND, RE, RA, RF, SYP/SYR, HIF3, MC100/ME020/ME010, F2541, A5005, A5006, A5007, A2509, A25010, A25011, A25012, B13001, B76201, VHB, VHC, VHD
1969738, 1969740, 1971845, 1971846, 1971895, 1971896, 1971946 thru 1971949, 1971954 thru 1971957, 2232008 thru 2232011, 2232000 thru 2232003, 2232016 thru 2232019, 1971962 thru 1971965, 2232024 thru 2232027, 2232289 thru 2232292, 2232043 thru 2232074, 2232298 thru 2232301, 2232511, 2232532, 2232557, 2232559, 2232560, 2232562, 2232563, 2232565, 2232566, 2232568, 2232569, 2232571, 2232572, 2232574, 2232575, 2232577, 2232578, 2232580, 2232581, 2232583, 2232584, 2232586, 2232587, 2232589, 2232590, 2232592, 2232593, 2232595, 2232596, 2232598, 2232599, 2232601, 2232602, 2232604, 2232605, 2232607, 2232608, 2232611 thru 2232682, 2292457, 2292458,
1064, 2064, 3064, 1080, 2080, 3080, 1100, 2100, 3100, 1120, 2120, 3120, 1150, 2150, 3150,
1180, 2180, 3180, 1230, 2230, 3230, 1250, 2250, 3250, 1280, 2280, 3280, 1300, 2300, 3300, 1480, 2480, 3480,
1630, 2630, 3630, 1780, 2780, 3780, 1950, 2950, 3950, 1010, 2010, 3010, 1013, 2013, 3013, 1015, 2015, 3015,
1016, 2016, 3016, 1025, 2025, 3025, 1035, 2035, 3035, 1045, 2045, 3045, 1058, 2058, 3058, 1999, 2999, 3999,
401, 402, 403, 503, TPA, BX
A1001 A1002 A1003 A1004 A1005 A1006 A1007 A1008 A1009 A1251 A1252 A1253 A1254
A1255 A1256 A1257 A1258 A1259 A1501 A1502 A1503 A1504 A1505 A1506 A1507 A1508
A1509 A2001 A2002 A2003 A2004 A2005 A2006 A2007 A2008 A2009 A2010 A2011 A2012
A2013 A2014 A2015 A2016 A2017 A2018 A2501 A2502 A2503 A2504 A2505 A2506 A2507
A2508 A2509 A25010 A25011 A25012 A25013 A25014 A25015 A25016 A25017 A25018 A2541 A2542
A2543 A2544 A2545 A2546 A2547 A2548 A2549 A3001 A3002 A3003 A3004 A3005 A3006
A3007 A3008 A3009 A3301 A3302 A3303 A3304 A3305 A3306 A3307 A3308 A3309 A3961
A3962 A3963 A3964 A3965 A3966 A3967 A3968 A3969 A4201 A4202 A4203 A4204 A4205
A4206 A4207 A4208 A4209 A5001 A5002 A5003 A5004 A5005 A5006 A5007 A5008 A5009
A5081 A5082 A5083 A5084 A5085 A5086 A5087 A5088 A5089 A6501 A6502 A6503 A6504
A6505 A6506 A6507 A6508 A6509 B1251 B1252 B1253 B1254 B1255 B1256 B1257 B1258
B1259 B1501 B1502 B1503 B1504 B1505 B1506 B1507 B1508 B1509 B2001 B2002 B2003
B2004 B2005 B2006 B2007 B2008 B2009 B2501 B2502 B2503 B2504 B2505 B2506 B2507

Unless otherwise agreed in writing, this document is issued by the Company subject to its General Conditions of Service printed overleaf, available on request or accessible at http://www.sgs.com/en/Terms-and-Conditions.aspx and, for electronic format documents, subject to Terms and Conditions for Electronic Documents at http://www.sgs.com/en/Terms-and-Conditions/Terms-e-Document.aspx. Attention is drawn to the limitation of liability, indemnification and jurisdiction issues defined therein. Any holder of this document is advised that information contained hereon reflects the Company's findings at the time of its intervention only and within the limits of Client's instructions, if any. The Company's sole responsibility is to its Client and this document does not exonerate parties to a transaction from exercising all their rights and obligations under the transaction documents. This document cannot be reproduced except in full, without prior written approval of the Company. Any unauthorized alteration, forgery or falsification of the content or appearance of this document is unlawful and offenders may be prosecuted to the fullest extent of the law. Unless otherwise stated the results shown in this test report refer only to the sample(s) tested .
Attention: To check the authenticity of testing /inspection report & certificate, please contact us at telephone: (86-755) 8307 1443, or email: CN.Doccheck@sgs.com
检验检测专用章 Inspection & Testing Services
SGS-CSTC Standards Technical Services Co., Ltd. Ningbo Branch Chemical Laboratory
No.1177, Lingyun Road, Hi-Tech Zone, Ningbo, Zhejiang, China 315040 t E&E (86-574)89070249 www.sgsgroup.com.cn
中国·浙江·宁波高新区凌云路1177号 邮编: 315040 t HL (86-574)89070271 t ML (86-574)89070242 sgs.china@sgs.com

B2508 B2509 B2541 B2542 B2543 B2544 B2545 B2546 B2547 B2548 B2549 B76201 B76202
B76203 B76204 B76205 B76206 B76207 B76208 B76209 B13001 B13002 B13003 B13004
B13005 B13006 B13007 B13008 B13009 C01581 C01582 C01583 C01584 C01585 C01586 C01587
C01588 C01589 C1251 C1252 C1253 C1254 C1255 C1256 C1257 C1258 C1259 C1501 C1502
C1503 C1504 C1505 C1506 C1507 C1508 C1509 C2001 C2002 C2003 C2004 C2005
C2006 C2007 C2008 C2009 C2501 C2502 C2503 C2504 C2505 C2506 C2507 C2508
C2509 C25010 C25011 C25012 C25013 C25014 C25015 C25016 C25017 C25018 C2541 C2542
C2543 C2544 C2545 C2546 C2547 C2548 C2549 C3001 C3002 C3003 C3004 C3005
C3006 C3007 C3008 C3009 C3501 C3502 C3503 C3504 C3505 C3506 C3507 C3508
C3509 C3681 C3682 C3683 C3684 C3685 C3686 C3687 C3688 C3689 C3961 C3962
C3963 C3964 C3965 C3966 C3967 C3968 C3969
C4001 C4002 C4003 C4004 C4005 C4006 C4007 C4008 C4009 C4141 C4142 C4143 C4144
C4145 C4146 C4147 C4148 C4149 C4201 C4202 C4203 C4204 C4205 C4206 C4207 C4208
C4209 C4501 C4502 C4503 C4504 C4505 C4506 C4507 C4508 C4509 C5001 C5002 C5003
C5004 C5005 C5006 C5007 C5008 C5009 C6201 C6202 C6203 C6204 C6205 C6206 C6207
C6208 C6209 C6351 C6352 C6353 C6354 C6355 C6356 C6357 C6358 C6359 D2801 D2802
D2803 D2804 D2805 D2806 D2807 D2808 D2809 D4801 D4802 D4803 D4804 D4805 D4806
D4807 D4808 D4809 D5201 D5202 D5203 D5204 D5205 D5206 D5207 D5208 D5209 D6301
D6302 D6303 D6304 D6305 D6306 D6307 D6308 D6309 D6201 D6202 D6203 D6204 D6205
D6206 D6207 D6208 D6209 D7001 D7002 D7003 D7004 D7005 D7006 D7007 D7008 D7009
F0501 F0502 F0503 F0504 F0505 F0506 F0507 F0508 F0509 F05010 F05011 F05012
F05013 F05014 F05015 F05016 F05017 F05018 F1001 F1002 F1003 F1004 F1005 F1006 F1007
F1008 F1009 F10010 F10011 F10012 F10013 F10014 F10015 F10016 F10017 F10018 F2541 F2542
F2543 F2544 F2545 F2546 F2547 F2548 F2549 P0001 P0002 P0003 P0004 P0005 P0006
P0007 P0008 P0009 P0010 P0011 P0012 P0013 P0014 P0015 P0016 P0017 P0018 P0019
P0020 P0021 P0022 P0023 P0024 P0025 P0026 P0027 D2301 D2302 D2303 D2304 D2305
D2306 D2307 D2308 D2309 D6001 D6002 D6003 D6004 D6005 D6006 D6007 D6008 D6009
D2201 D2202 D2203 D2204 D2205 D2206 D2207 D2208 D2209

Unless otherwise agreed in writing, this document is issued by the Company subject to its General Conditions of Service printed overleaf, available on request or accessible at http://www.sgs.com/en/Terms-and-Conditions.aspx and, for electronic format documents, subject to Terms and Conditions for Electronic Documents at http://www.sgs.com/en/Terms-and-Conditions/Terms-e-Document.aspx. Attention is drawn to the limitation of liability, indemnification and jurisdiction issues defined therein. Any holder of this document is advised that information contained hereon reflects the Company's findings at the time of its intervention only and within the limits of Client's instructions, if any. The Company's sole responsibility is to its Client and this document does not exonerate parties to a transaction from exercising all their rights and obligations under the transaction documents. This document cannot be reproduced except in full, without prior written approval of the Company. Any unauthorized alteration, forgery or falsification of the content or appearance of this document is unlawful and offenders may be prosecuted to the fullest extent of the law. Unless otherwise stated the results shown in this test report refer only to the sample(s) tested .
Attention: To check the authenticity of testing /inspection report & certificate, please contact us at telephone: (86-755) 8307 1443, or email: CN.Doccheck@sgs.com

SGS-CSTC Standards Technical Services (Ningbo) Co., Ltd. Ningbo Branch Chemical Laboratory
No.1177, Lingyun Road, Hi-Tech Zone, Ningbo, Zhejiang, China 315040 t E&E (86-574)89070249 www.sgsgroup.com.cn
中国·浙江·宁波高新区凌云路1177号 邮编: 315040 t HL (86-574)89070271 t ML (86-574)89070242 sgs.china@sgs.com

附件

元素(IEC62321) 测试流程图

1)样品按照下述流程被完全消解

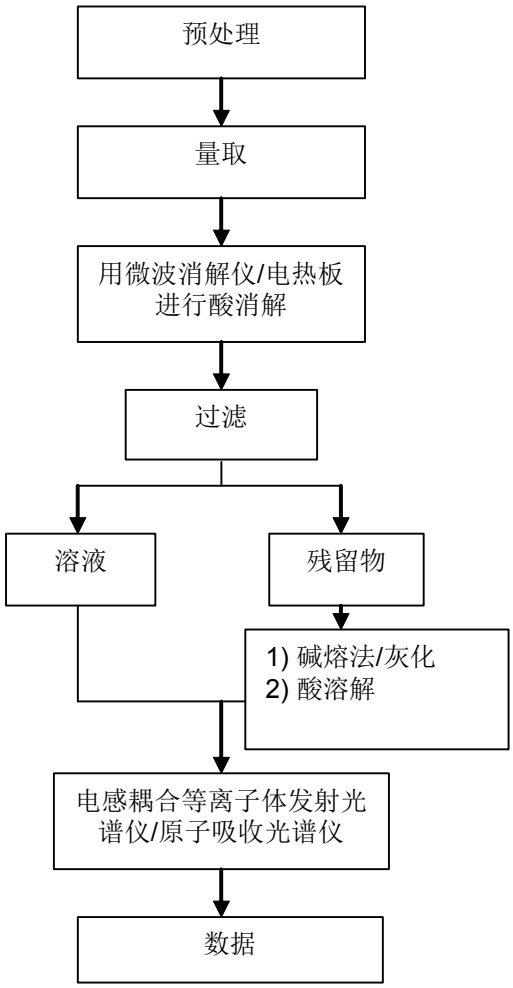

Unless otherwise agreed in writing, this document is issued by the Company subject to its General Conditions of Service printed overleaf, available on request or accessible at http://www.sgs.com/en/Terms-and-Conditions.aspx and, for electronic format documents, subject to Terms and Conditions for Electronic Documents at http://www.sgs.com/en/Terms-and-Conditions/Terms-e-Document.aspx. Attention is drawn to the limitation of liability, indemnification and jurisdiction issues defined therein. Any holder of this document is advised that information contained hereon reflects the Company's findings at the time of its intervention only and within the limits of Client's instructions, if any. The Company's sole responsibility is to its Client and this document does not exonerate parties to a transaction from exercising all their rights and obligations under the transaction documents. This document cannot be reproduced except in full, without prior written approval of the Company. Any unauthorized alteration, forgery or falsification of the content or appearance of this document is unlawful and offenders may be prosecuted to the fullest extent of the law. Unless otherwise stated the results shown in this test report refer only to the sample(s) tested .
Attention: To check the authenticity of testing /inspection report & certificate, please contact us at telephone: (86-755) 8307 1443, or email: CN.Doccheck@sgs.com

No.1177, Lingyun Road, Hi-Tech Zone, Ningbo, Zhejiang, China 315040 t E&E (86-574)89070249 www.sgsgroup.com.cn
中国·浙江·宁波高新区凌云路1177号 邮编: 315040 t HL (86-574)89070271 t ML (86-574)89070242 sgs.china@sgs.com

附件

六价铬测试流程图

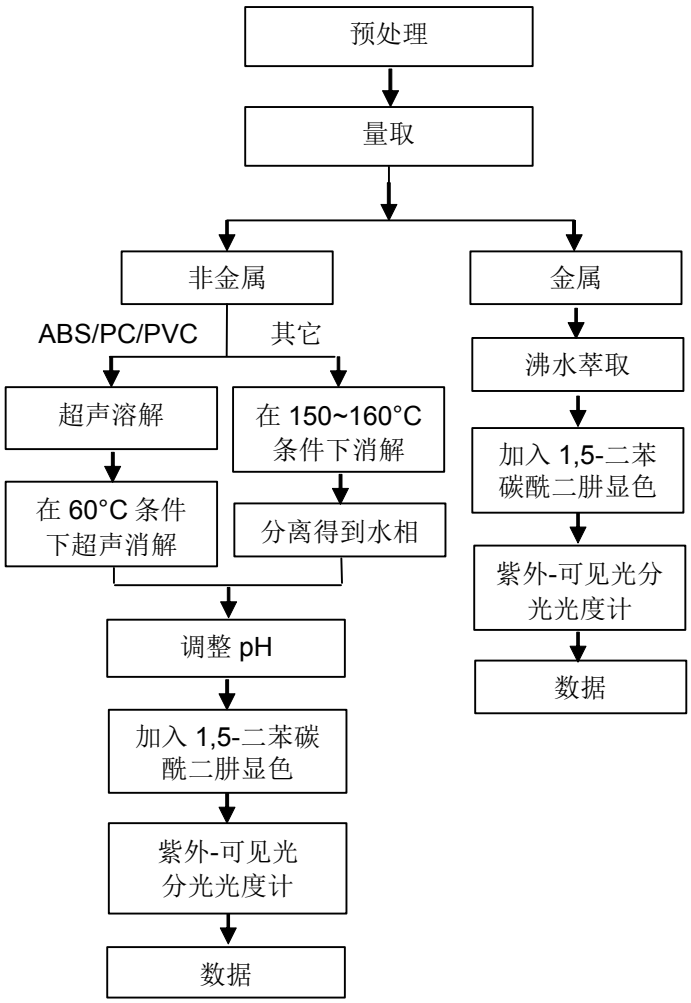

Unless otherwise agreed in writing, this document is issued by the Company subject to its General Conditions of Service printed overleaf, available on request or accessible at http://www.sgs.com/en/Terms-and-Conditions.aspx and, for electronic format documents, subject to Terms and Conditions for Electronic Documents at http://www.sgs.com/en/Terms-and-Conditions/Terms-e-Document.aspx. Attention is drawn to the limitation of liability, indemnification and jurisdiction issues defined therein. Any holder of this document is advised that information contained hereon reflects the Company's findings at the time of its intervention only and within the limits of Client's instructions, if any. The Company's sole responsibility is to its Client and this document does not exonerate parties to a transaction from exercising all their rights and obligations under the transaction documents. This document cannot be reproduced except in full, without prior written approval of the Company. Any unauthorized alteration, forgery or falsification of the content or appearance of this document is unlawful and offenders may be prosecuted to the fullest extent of the law. Unless otherwise stated the results shown in this test report refer only to the sample(s) tested .
Attention: To check the authenticity of testing /inspection report & certificate, please contact us at telephone: (86-755) 8307 1443, or email: CN.Doccheck@sgs.com

SGS-CSTC Standards Technical Services Co., Ltd. Ningbo Branch Chemical Laboratory
No.1177, Lingyun Road, Hi-Tech Zone, Ningbo, Zhejiang, China 315040 t E&E (86-574)89070249 www.sgsgroup.com.cn
中国·浙江·宁波高新区凌云路1177号 邮编: 315040 t HL (86-574)89070271 t ML (86-574)89070242 sgs.china@sgs.com

样品照片:

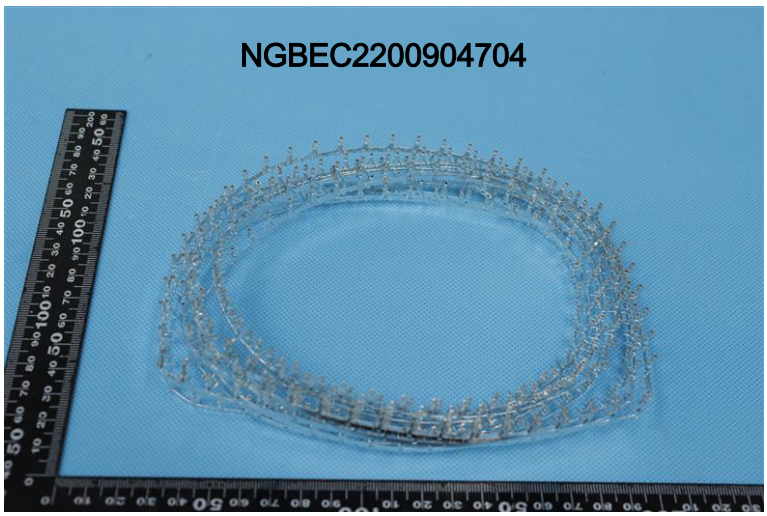

NGB22-009047.001

此照片仅限于随SGS正本报告使用

*** 报告完 ***

Unless otherwise agreed in writing, this document is issued by the Company subject to its General Conditions of Service printed overleaf, available on request or accessible at http://www.sgs.com/en/Terms-and-Conditions.aspx and, for electronic format documents, subject to Terms and Conditions for Electronic Documents at http://www.sgs.com/en/Terms-and-Conditions/Terms-e-Document.aspx. Attention is drawn to the limitation of liability, indemnification and jurisdiction issues defined therein. Any holder of this document is advised that information contained hereon reflects the Company's findings at the time of its intervention only and within the limits of Client's instructions, if any. The Company's sole responsibility is to its Client and this document does not exonerate parties to a transaction from exercising all their rights and obligations under the transaction documents. This document cannot be reproduced except in full, without prior written approval of the Company. Any unauthorized alteration, forgery or falsification of the content or appearance of this document is unlawful and offenders may be prosecuted to the fullest extent of the law. Unless otherwise stated the results shown in this test report refer only to the sample(s) tested .
Attention: To check the authenticity of testing /inspection report & certificate, please contact us at telephone: (86-755) 8307 1443, or email: CN.Doccheck@sgs.com

SGS-CSTC Standards Technical Services Co., Ltd. Ningbo Branch Chemical Laboratory
No.1177, Lingyun Road, Hi-Tech Zone, Ningbo, Zhejiang, China 315040 t E&E (86-574)89070249 www.sgsgroup.com.cn
中国·浙江·宁波高新区凌云路1177号 邮编: 315040 t HL (86-574)89070271 t ML (86-574)89070242 sgs.china@sgs.com

化 学 品 安 全 说 明 书

MSDS

第一部分：化学制品、产品或公司信息

产品名称： PA66
产品别名：聚酰胺
责任方：浙江联和电子有限公司
一般用途:工程热塑性塑料

MSDS编号: PA66

第二部分：合成物或成分信息

组成部分：成分 CAS号码基础树脂 32131-17-2这是一种聚合物材料。所有成分和聚合物系统紧密结合，因此，目前正常的加工和处理情况下没有存在接触的可能性。本产品可能含有专利成分。根据美国《职业安全与卫生条例》，本产品没有被归类为危险品，此化学品安全说明书包含关于安全处理和合理使用本产品的有价值的重要信息。该说明书应妥善保管以便员工或其他使用该产品的用户使用。本产品不受加拿大《工作场所危险物质信息系统》管制。

第三部分：危险鉴定

紧急情况概述：轻微的不规则颗粒物状。燃烧分解可能会产生有危害性的气体基础树脂粉尘或粉末在美国矿务局相关粉尘爆炸的危害等级为低级。熔料可能会导致皮肤或眼睛接触性的热灼伤。此外，溢出的固体硬颗粒可能会造成滑倒的危险。

潜在健康影响：接触方式:皮肤和眼睛接触；气体吸入，如果温度过热的话。征兆症状：没有相关的具体资料。

即刻健康影响：
皮肤：本产品没有相关的具体资料。产品中可能含有的聚合物颗粒和纤维增强也可能会造成机械性的伤害。热性或熔化材料有潜在的可能导致热灼伤。
眼睛:本产品没有相关的具体资料。产品中可能含有的聚合物颗粒和纤维增强也可能会造成机械性的伤害。

吸入：	本产品没有相关的具体资料。从供应的形式来看，本产品不存在被吸入的危险；然而聚合物颗粒可能被认为一种是惰性的微害微粒。加热过程中可能会有产生刺激性气体的危险。
摄入：	本产品没有相关的具体资料。但是，基于高分子聚合物的生物活性，摄取本产品预计会造成轻微的毒性。
长期或滞后影响：	没有相关的具体资料。
致癌性：	国际癌症研究机构（ IARC）曾评估过本产品中可能含有的碳黑，并发现它可能对人类有致癌性（ 2B组）。本产品中的任何碳黑成分都被聚合物体系紧密结合，因此，目前正常的加工和处理情况下致癌的几率很小。
医疗条件风险加剧：	本产品没有相关的具体资料。废气可能会被释放，如果过热的话，会影响那些有呼吸系统慢性疾病的人。

第四部分：急救措施

皮肤：如果烫的或熔化的聚合物或者热气接触皮肤，迅速用冷水降温。如果聚合物被粘在皮肤上，不要擅自去除，但是允许粘附的聚合物自然脱落，应寻求医学处理。相比聚合物随着时间推移自行脱落而言，擅自去除粘在皮肤上的聚合物，可能会造成更多的组织损伤。

眼睛：用大量的水冲洗。如果仍旧不舒适，应寻求医疗处理，去除异物。

吸入：转移到空气新鲜之处。如果呼吸困难的情况仍然发生，应寻求医学处理。

摄入：如果相当数量的本产品被吞咽，应饮用两杯水来稀释，并寻求医学处理。

医生注意事项：本产品本质上是惰性和无毒的。然而，如果被加热到高温或被燃烧，可能会有气体排放出来（见第五和第十部分的气体排放）。在这些排放的气体中，一氧化碳和一氧化氮昀有可能具有显著的临床毒性。那些曾暴露在有毒气体中的患者需要检查碳氧血红蛋白水平和动脉血气。如果一个酸中毒患者的碳氧血红蛋白水平是正常的，考虑氰化物毒性。如果患者与气体的接触发生在密闭空间内，则存在窒息（二氧化碳逐渐替代氧气）发生的可能性。一氧化氮对呼吸道有着强烈的刺激性。如果患者可能已经吸入高浓度和刺激性的烟雾，应考虑监测肺水肿病延后发生的可能。

第五部分：救火措施

闪点:不适用
危险燃烧产物：一氧化碳、二氧化碳和氮氧化物
灭火介质：水、泡沫材料、二氧化碳或干化学制
剂灭火指南：消防人员应携带自给式呼吸器和全套防护服。消防人员避免逆风救火。水应该用来给火灾中各种容器的降温。水、泡沫和干化学制剂可能会对电器设备造成损伤。

第六部分：意外泄漏对策

泄漏处理程序：用适当工具清扫泄漏场所，收集泄漏物料，以便恢复和处理。

第七部分：处理和储藏

处理：没有合适的器械，不要处理烫的或者熔化的物料。工作场所应保持整洁有序。不要超过推荐的温度，使分解产物的释放昀小化。不要在有聚合物粉尘存在的场所抽烟。在传输和加工的过程中，应采取恰当的措施控制粉尘的产生和积累。
储藏：储藏在阴凉干燥的场所，保证树脂的干燥度。

第八部分：接触控制 /个人防护

工程控制：局部排气：建议在适当的时候以控制员工接触粉尘或蒸汽。总体而言，作为控制员工暴露在粉尘或者蒸汽中的唯一手段，此办法恐怕不能满足需要。
装备推荐：
皮肤：加热或熔化过程中，有机会接触物料时应穿着长裤、长袖、隔
热手套和面罩。
眼睛：推荐安全眼罩。
吸入：如果粉尘或分解气体的产生有可能高于所允许接触的上限值，推荐使用经国家职业安全与健康研究所认证的防毒面罩 /口罩。

接触指导方针 :本产品中可能含有的任何玻璃颗粒被聚合物系统紧密结合。残留的玻璃颗粒（<1%）可能存在，导致机械性的眼部、皮肤和呼吸刺激。包括机械加工或磨削在内的操作或部分应加以审查，以确保颗粒水平低于推荐的标准，本产品可能含有炭黑。见下列的接触极限值。

成分	机构	参数
炭黑	美国职业安全与健康条例 -允许接触极限	3.5 mg/cu m
	美国政府工业卫生专家会议 -临界值限定	3.5 mg/cu m
微害惰性粉尘	美国职业安全与健康条例 -允许接触极限	15 mg/cu m (全部) 5 mg/cu m (可吸入)
微害颗粒/微粒	美国政府工业卫生专家会议 -临界值限定	10 mg/cu m (全部) 3 mg/cu m (可吸入)

第九部分：物理和化学特性

外观：颗粒状物
气味：轻微的典型气味
物理状态：固态
气压：不适用
熔点（树脂）： 265℃（509℉）
溶解性：可忽略不计 < 0.1%（水）
比重： 1.40~1.50
挥发率：<0.5按重量计

第十部分：稳定性和反应性

化学稳定性：在通常使用和储存条件下保持稳定
避免条件：燃烧：不要加热超过 650℉（ 343℃）。避免长时间暴露在温度高于 600℉（316℃）的环境。
不能共存性：强酸和氧化剂
危险分解物：一氧化碳、氨 /氨水、脂族胺、氨基化合物/酰胺、酮、腈和氢氰酸。
危险聚合反应：不会发生。

第十一部分：毒物学信息
本产品没有相关的具体资料。

第十二部分：生态学信息

生物毒性：对于树脂颗粒可能被野生动物摄入所造成的影响，我们还不是很清楚。如果是海鸟，一些海洋生物学家认为，鸟类消化道可能无法让塑料颗粒通过。因此，大量摄入颗粒可能会导致肠堵塞，饱食的错觉或营养吸收的减少，从而导致营养不良和饥饿。由塑料工业协会的发起的‘彻底清除行动’（OCS）的目标就是实现塑料颗粒零损失，防止其输入环境。
环境结果/信息：此材料被认为是不可生物降解的。

第十三部分：处置条件
处置：鼓励回收。按照当地政策法规处置本产品。

第十四部分：运输信息
不适用

第十五部分：法规信息

<美国>《有毒物质管理法》：
本产品的所有成分符合有毒物质管理法目录条例。
<美国>《超级基金增补和再授权法案》： 本产品不包含任何受限于《紧急规划和社区知权法》（1986）第 313章和《联邦法规汇编》第 40标题第 372部分中的报告规定的有毒化学物质。

第十六部分：其它信息

危害等级：	健康	可燃性	反应性	其它
国家防火协会	1	1	0	
危险物质鉴别系统	1	1	0	

否认声明： 本产品不适用于作为医学或牙科植入物的使用。为获取详细的工艺指导和良好的生产实践（净化、工艺参数、停炉等），请参阅相应的大赛璐公告。据我们所知，这里所含的信息是正确的。我们没有暗示或者保证此文件所列出的危险已经包含全部危险。大赛璐不做任何关于在你方工艺或与其他物质结合过程中安全使用本产品的明示或暗示性的保证。本产品的使用效果可能会因为其他材料的使用而恶化；或者说本产品可能增强，也可能恶化其他材料的使用效果。用户有其责任对任何使用或者使用方式加以仔细考虑并确定物料的适用性。用户必须符合所有适用的安全和健康标准。

材料安全数据表(MSDS)

第 1 部分　产品品名与制造商信息
Part 1　Description of Goods and Producer Information

产品名称：　锡磷青铜带
Description of goods: Phosphor bronze strip

牌号：　C5111R 、C5102R、C5191R、C5210R、C5240R、C51100、C51000、C51900、C52100、C52400、QSn6.5-0.1、QSn8-0.3
Type No: C5111R 、C5102R、C5191R、C5210R、C5240R、C51100、C51000、C51900、C52100、C52400、QSn6.5-0.1、QSn8-0.3

生产商：　安徽鑫科铜业有限公司
Producer: Anhui Xinke Copper Co., Ltd.

电话：0086-553-5313737 , 5313583
Tel:　0086-553-5313737, 5313583

第 2 部分　组成成份
Part 2　Composition

Type No. 牌号	Chemical composition: %, minimum 化 学 成 分: % , 不大于						
	Pb	Fe	Sn	P	Zn	Cu	Cu+ Sn+ P
C5111R、C51100	0.02	0.1	3.5~4.5	0.03~0.35	0.2	Balance	≥99.5
C5102R、C51000	0.05	0.1	4.5~5.5	0.03~0.35	0.2	Balance	≥99.5
C5191R、C51900、QSn6.5-0.1	0.05	0.1	5.5~7.0	0.03~0.35	0.2	Balance	≥99.5
C5210R、C52100、QSn8-0.3	0.05	0.1	7.0~9.0	0.03~0.35	0.2	Balance	≥99.5
C5240R、C52400	0.02	0.1	9.0~11.0	0.03~0.35	0.2	Balance	≥99.5

第 3 部分　危害信息
Part 3　Hazards Identification

吸入金属粉尘:造成呼吸困难。
To inhale the metal powder: can cause headaches and breathing problems.
金属粉末对眼睛危害:损伤视力。
Impact on eyes from the metal powder: Eyesight could be harmed.
对皮肤的影响:划伤。
Impact on skin: Skin could be incised wound.
致癌性:无资料。

Carcinogenic: No information.

第 4 部分 急救措施
Part 4 First Aid Measures
皮肤接触：清除粉尘，用肥皂水清洗。
Skin contaminated: Remove the powder with soap-suds.
眼睛接触：立即翻开上下眼睑，用水清洗。
Eyes contaminated: Turn open eye-lids immediately, and wash them with clean water.
吸入： 转移至空气新鲜处。
Inhaled: Move to the place with fresh air.

第 5 部分 消防措施
Part 5 Fire fighting measures
可燃性：非易燃。
Combustibility: Not combustible.
爆炸性：非易爆。
Explosibility: Not explosive.

第 6 部分 泄露应急处理
Part 6. Accidental Release Measures
产品为固体，无泄漏现象。
The product is solid, no leakage phenomenon.

第 7 部分 操作和储存
Part 7 Handling and Storage
操作：注意被割伤划伤。
Handling: Be careful not to being cut.
包装方法：密封包装(参照《重有色金属加工产品的包装、标志、运输和贮存》（GB8888-88）)。
Package: Hermetic package (Please refer to “Packing, marking, transporting and stocking ways of processed non-ferrous metals” (GB GB8888-88）).
储存：应包装好存放于通风良好、干燥、荫凉之场所。
Storage: Goods should be well wrapped and stored in ventilated, dry and shady places.

第 8 部分 接触控制和个人防护措施
Part 8. Exposure Controls/Personal Protection
空气中铜和锡最高容许浓度：CU：0.1MG/M^3 SN： 2MG/ M^3。
Maximum thickness of Cu and Sn in the air: CU：0.1MG/M^3 SN： 2MG/ M^3.
监测方法：OSHA PEL 标准。
Detection methods: According to OSHA PEL Standard.
工程控制：加强通风。
Engineering control: Keep the working place ventilated.
呼吸系统防护：超过标准浓度时佩带过滤式防毒面具。
Respiratory organs protection: Must wear screen-style gas mask if the thickness is higher than the safe standard.
眼睛防护：佩戴边部带遮片的防护眼镜。
Eyes protection: Wear protective glasses with protecting side panes.
身体防护：穿戴防护工作服。

Body protection: Wear protective working clothes.
手防护： 佩戴防护手套。
Hands protection: Wear protective working gloves.
其他防护：面罩，特制的彩色眼镜。
Others: Wear protective mask, special color glasses.

第 9 部分 物理和化学特性
Part 9 Physical and chemical properties

外观：黄色或红色的金属色泽，不溶于水，无味。
Appearance: Yellowish and reddish color with metal luster, non-dissoluble in water, insipid with no smell.
熔点：1290-2260F。
Melting point: 1290-2260F.
溶解性：不溶于水。
Dis-solubility: Non-dissoluble in water.
密度：8800kg/m^3。
Density: 8800kg/m^3.
主要用途：连接器、接插端子等。
Usages: Connectors,terminals and etc.

第 10 部分 稳定性和反应活性
Part 10 Stability and reactivity

稳定性：稳定。
Stability: Stable.
禁配物：酸，氧化剂。
Substances prohibited to be with: Acid, oxidizer.
应该避免接触的条件或物质：水，高热，火，化学反应。
Substances or conditions prohibited to touch: Water, high temperature, fire, chemical reaction.

第 11 部分 毒理学信息
Part 11 Toxicological Information

急性毒性：无。
Acute toxicity: No.
亚急性和慢性毒性：无。
Sub-acute toxicity and chronic toxicity: No.
致敏性：金属过敏，皮炎，手足角质化，上呼吸道不适。
Possibility of causing irritability: Irritability against metals, dermatitis, horny-skin of hands and feet skin, feeling uncomfortable in the upper respiratory organs.
致癌性：无。
Possibility of causing cancer: No.

第 12 部分 生态学信息
Part 12. Ecological Information

Apply Europe environment-protection standard: No negative effects on environment.
执行欧洲环境标准: 对环境无不良影响。
Limit of contents of hazardous substances:
有害物质最大限量：

Item No. 序号	Chemical elements 化学成分	limit of contents 最大限量	
1	Pb 铅	＜80PPM	＜0.008%
2	Cd 镉	＜5 PPM	＜0.0005%
3	Hg 汞	＜5 PPM	＜0.0005%
4	Ba 钡	＜100 PPM	＜0.01%

第 13 部分：废弃处置
Part 13 Disposal Considerations
废弃物类别：工业固体废物。
Category of the wastes: Industrial solid wasters.
废弃处置方法：可回收再利用。
Methods of treatment: Can be reclaimed and reused.

第 14 部分 运输信息
Part 14 Transport Information
运输注意事项：防止水分接触，以防腐蚀。
Matters needing attentions in transportation: Avoid water, which can cause corrosion.

第 15 部分 法规信息
Part 14 Regulatory Information
中华人民共和国安全生产法
Production Safety Law of the People's Republic of China
中华人民共和国环境保护法
Environmental Protection Law of the People's Republic of China

第 16 部分 其他信息
Part 16 Other Information
无
NO.

乐清市远方电子电镀有限公司

物质安全资料（MSDS）

1、化学产品及企业标识：

化学产品俗名：甲基磺酸锡（**MS　TIN300G/L**）　　**$(CH_3SO_3)_2SN$**

化学产品代码：TAK05-020

企业名称：乐清市远方电子电镀有限公司

电话：（0577）62357000

传真：（0577）62359000

紧急电话：

2、配料的组分/有关数据

产品中危害成分

组成 ：	CAS 编号	含量	职业安全级别
甲基磺酸锡$(CH_3SO_3)_2SN$	53408-94-9	55%	不确定
甲基磺	75-75-2	10%	不确定
水		35%	

3、危险性说明

危险性/对健康的危害性

健康危害：本品对眼和呼吸道有刺激性。对皮肤有刺激性和致敏作用。口服刺激消化道，引起呕心、呕吐、惊厥。

环境危害：燃爆危险，本品易燃，有毒，具刺激性，具致敏性。

4、急救措施：

皮肤接触：脱去污染的衣着，用肥皂水和清水彻底冲洗皮肤。

眼睛接触：提起眼睑，用流动清水或生理盐水冲洗，就医。

呼吸吸入此化学剂：迅速脱离现场至空气新鲜处。保持呼吸道通畅，如呼吸困难，给输氧。如呼吸停止立即进行人工呼吸，就医。

食入：饮足量温水，催吐，就医。

5、消防措施：

危险特性：遇高热，明火或与氧化剂混合，经摩擦，撞击有引起燃烧爆炸的危险。在高温时，若为汞盐，强酸，碱土金属，氢氧化物及卤化物等污染后，有可能发生爆炸。

有害燃烧产物：一氧化碳 二氧化碳

灭火方法：采用水、抗溶性泡沫、二氧化碳、干粉、沙土灭火。

6、排除故障的措施：

应急处理：隔离泄漏污染区，限制出入，切断火源。建议应急处理人员带防尘面具，穿防毒服。不要直接接触泄漏物。

小量泄漏：用洁净的铲子收集于干燥、洁净、有盖的容器中。

大量泄漏：收集回收货运至废物处理厂所处置。

7、此化学剂的装运和储存

操作注意事项：密闭操作，局部排风。操作人员必须经过专门培训，严格遵守操作规程。建议操作人员佩戴自吸过滤式防尘口罩，佩戴化学安全防护眼睛，穿透气型防毒服，戴防化学品手套。远离火种、热源，工作场所严禁吸烟。使用防暴型的通风系统和设备。避免产生粉尘。避免与氧化剂、碱类接触。搬运时要轻装轻卸，防止包装及容器损坏。配备相应品种和数量的消防器材及泄漏应急处理设备。倒空的容器可能残留有害物质。

储存注意事项：储存于阴凉、通风的库房。远离火种、热源。包装密封，应与氧化剂，碱类，食用化学品分开存放，切忌混储。采用防暴型照明，通风设施。禁止使用易产生火花的机械设备和工具。储区应备有合适的材料收容泄漏物。

8、接触控制/人体防护

监测方法：

工程控制：加强通风。

呼吸系统防护：在通风不足的地方使用，佩戴自吸过滤式防酸口罩。

眼睛防护：佩戴化学安全防护眼镜。

身体防护：穿透气型防毒服。

手防护：佩戴化学品手套。

其他防护：工作现场严禁吸烟。避免长期反复接触。定期体检，注意个人清洁卫生。

9、此化学剂的物理性质和化学性质

形状：液体

颜色：淡黄色

溶水性：可溶于水

相对密度：1.55

溶点℃：-60

沸点℃：＞109

10、稳定性和可反应性

稳定性：稳定。

此化学剂需避免接触的物质：碱、氰化物和水反应材料

避免：避免高温

危害分解产物：如果温度超过 200 度热分解物流硫的氧化物和碳氧化物，该产品在室温下稳定。

11、有关此化学剂毒性的资料

请参阅第 3 章节的此化学剂的危险性和对人体的危害性。

12、有关生态的资料

生态毒性：

污染水质：不确定

13、有关排污的说明

咨询当地有关排污的法规和要求。

废物排放：按照当地有关的法规和要求排污。

14、有关运输的资料

UN 编码：NA

UN 运送名称：NA

UN 等级：NA

UN 包装：25KG

包装方法：小开口钢桶；螺纹口玻璃瓶、铁盖压口玻璃瓶、塑料瓶或金属桶（罐）外普通木箱；螺纹口玻璃瓶、塑料瓶或镀锡薄钢板桶（罐）外满底板花格箱、纤维板箱或胶合板箱。

运输注意事项：运输前应检查包装容器是否完整、密封，运输过程中要确保容器不泄漏、不倒塌、不坠落、不损坏。严禁与碱类、氧化剂、食品及食品添加剂混运。运输时运输车辆应配备相应品种和数量的消防器材及泄漏应急处理设备。运输途中应防曝晒、雨淋、防高温。

15、有关法规的资料

有关法规：化学危险物品安全管理条列(1987 年 2 月 17 日国务院发布)，化学危险物品安全管理条列实施细则（化劳发「1992」677 号），工作场所安全使用化学品规定等法规（「1996」劳动部发 423 号），针对化学危险品的安全使用、生产、储存、运输、装卸等方面均作了相应规定；常用危险化学品的分类及标志（GB13690-92）将该物质化为第 6.1 类毒害品。

有关安全的事宜：

S 24/25　此化学剂避免接触眼睛和皮肤。

16、其他有关的资料

警告：此安全数据清单中仅涉及指定化学产品的有关资料，准确、可用，但作为建议或推荐，仅供参考，不能作为产品使用的担保，此产品的使用情况取决于用户的操作使用。而且，此资料中的有关说明不适用于与现有专利所涉及的物质和用途不一致的产品。

制造（供应）商名称：乐清市远方电子电镀有限公司

地址：乐清市虹桥镇东工业区幸福东路 1002 号

电话：0577-62388000　　传真：0577-62359000

紧急联络人：方兴峰

公司盖章:

填表时间：2011 年 1 月 8 日

反馈与建议：