浙江联和电子有限公司
ZHEJIANG LIANHE ELECTRONICS CO., LTD.

承　认　书
SPECIFCATION FOR APPROVAL

客户名称 CUSTOMER: _____

品名 DESCRIPTION: 4.8(187)插片

料号 CUSERTOMER PART NO: D480J-T51

客户确认 APPROVED SIGNATURES

核准 APPROVAL: _____ 日期 DATE: _____

工程 ENGINEERING: _____ 日期 DATE: _____

品管 QC: _____ 日期 DATE: _____

承认结果: ☐ 承认 ☐ 不承认 ☐ 重新送样

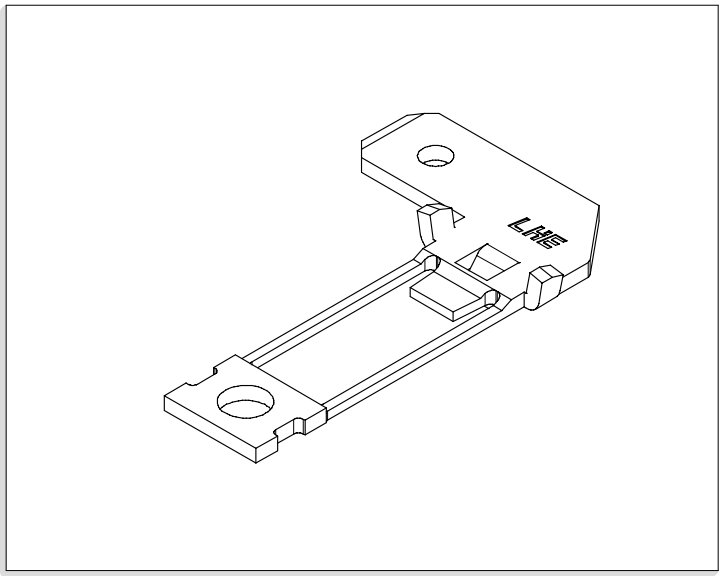

规格 Specifications

1. 极数 Poles: /
2. 额定电流 Current rating: 20A AC,DC
3. 额定电压 Voltage rating: / AC,DC
4. 温度范围 Temperature range: -25℃ to +105℃
   (含通电温度上升值)
   (Including temperature rise in applying electrical current)
5. 接触电阻 Contact resistance: 初期 Initial value / /
   环境测试后 After environmental testing / /
6. 绝缘电阻 Insulation resistance: /
7. 耐电压 Withstanding voltage: / AC/minute
8. 适用线规 Applicable wire: /
9. 适用基板厚度 Applicable PC board thickness: /

浙江联和电子有限公司　地址：浙江省乐清市乐清港湾区创新路8号
Zhejiang Lianhe Electronics Co., Ltd.　Add: No 8 Innovation Road, Yueqingwan area, Yueqing Zhejiang
Web:www.lhecn.com　www.lhe.en.alibaba.com　Tel:86-0577-62383668 0577-62383212 Fax:86-0577-62382566

4.8(187)插片承认书目录

目录(COVER) 1

料号说明(DESCRIPTION OF ITEM NUMBER) 2

图纸(DRAWING) 3

产品性能测试(PERFORMANCE TEST) 4

端子RoHS报告(TERMINAL ROHS REPORT) 7

MSDS 14

反馈与建议(FEEDBACK AND SUGGESTIONS) 16

制订 Edit: 石斛 日期 DATE: 2024-04-25

审核 Check: 天琴 日期 DATE: 2024-04-25

批准 Approval: 季育文 日期 DATE: 2024-04-25

4.8(187)插片料号说明 Description of item number

端子料号说明 TERMINAL

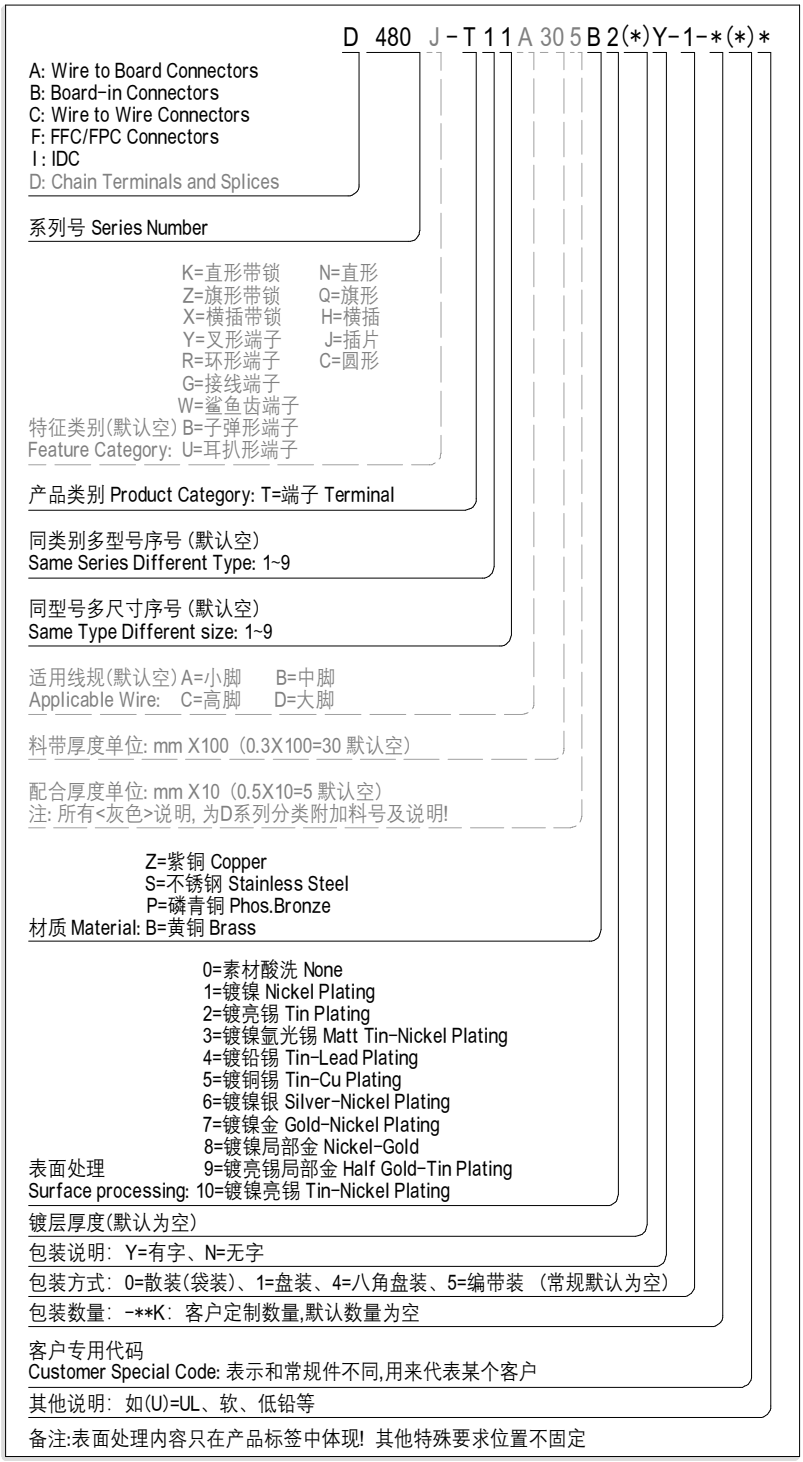

其它料号说明 OTHER

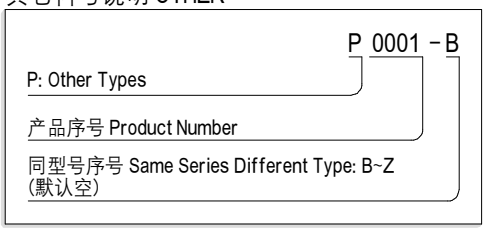

4.8(187)插片承认书图面

名　　称	材　　料	图　　号	附　　注
端子 Terminal	Brass	LHE\GC-3	

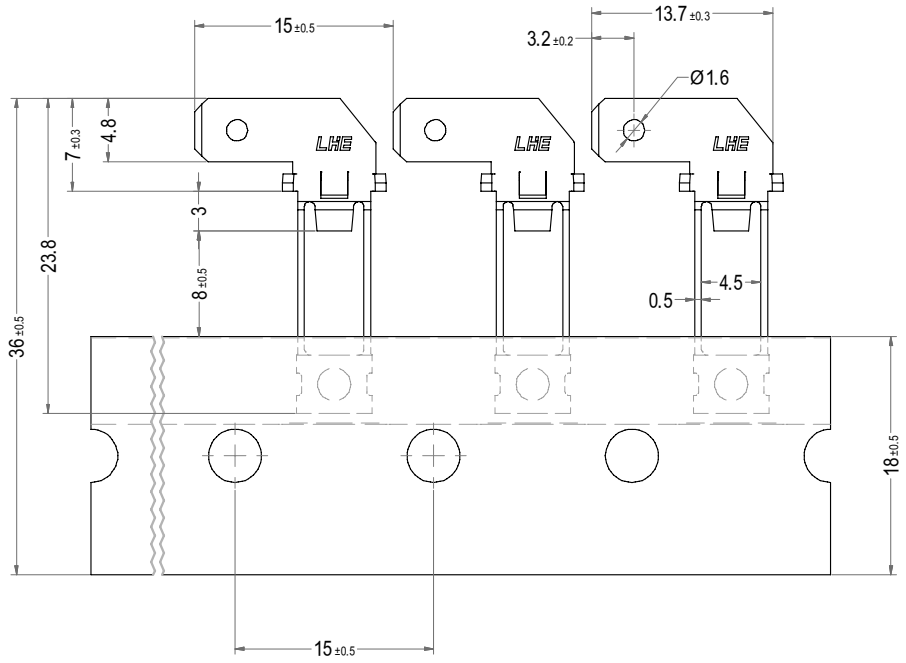

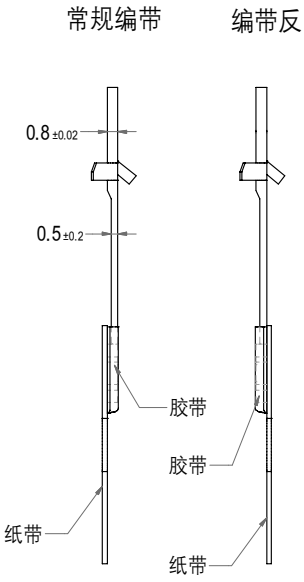

LHE® 浙江联和电子有限公司			
品名	4.8(187)插片T51	比例	7：4
料号	D480J-T51B	未注公差(mm)	
图号	LHE\GC-3	>0~3	±0.12
材料	Brass	>3~18	±0.15
制图	石 娟 2024-09-13	>18~50	±0.3
审核	天琴 2024-09-13	>50~120	±0.5
批准	季育文 2024-09-13	X°	±3°
视角		X.X°	±0.5°

项目 Item	测试条件 Test Condition	规格要求 Requirement	
1.外观 Appearance	目测 Visual by eye 视力 Light: >1.0 照明 Lamp: 200~300Lx 目测距离 Space: 0.3~0.5m GB/T 5095.1 Method 1a	1.塑料件表面应无明显疤痕、凹陷、开裂及影响使用的变形。 Plastic part:smooth and flat surface without discolor,broken,crack distortion defects is acceptable. 2.金属件表面无锈蚀、氧化、无明显的机械损伤等缺陷。 Metal part:btight and even surface without rust,oxide,fog and obvious physical damage defects is acceptable. 3.导线表面清洁、无破损等缺陷,印字及标志清晰。 Wire:clearing surface without discolor,broken defects,indistinct words and mark is acceptable.	
2. 耐高温 Heat Resistance	连接器配合后, 于+105℃±2℃的空气中放置96小时, 然后再回到室温中放置1~2小时测定 Mated connectors are exposed to a temperature of +105℃±2℃ for 96 hours. GB/T 5095.6 Method 11i /EIA-364-17B	外观 Appearance	无损伤 No Damage
3. 耐低温 Clod Resistance	连接器配合后, 于-25℃±2℃的空气中放置96小时, 然后再回到室温中放置1~2小时测定 Mated connectors are exposed to a temperature of -25℃±2℃ for 96 hours. GB/T 5095.6 Method 11i /EIA-364-17B	外观 Appearance	无损伤 No Damage
4. 恒定湿热 Humidity	温度 Temperature: 40±2℃ 相对湿度 Relative Humidity: 90%~95% 搁置时间 Duration: 96h, 取出恢复2小时后检查 GB/T 5095.6 Method 11c/EIA-364-31B	外观 Appearance	无损伤 No Damage
5. 温度循环 Temperature cycle	把测试样品放入高低温试验箱中,按下列步骤调试温度: a)在-25℃±2℃的恒温条件下放置0.5小时; b)在+105℃±2℃的恒温条件下放置0.5小时; 从a)到b)为一个循环周期,共进行5个循环。恢复1h后检查。状态转换时间不多于1小时。 Mated connectors are exposed to 5 cycles of: a)-25℃±2℃ 0.5hour b)+105℃±2℃ 0.5hour GB/T 5095.6 method 11d/EIA-364-32C	外观 Appearance	无损伤 No Damage
6. 盐雾 Salt Spray	把先冲后镀*的测试样品从试验箱顶悬挂下来, 采用浓度为5%±1(质量百分比)的氯化钠溶液, 连续雾化24小时, 试验后用流动的蒸馏水轻轻洗去表面沉积物。在常温常驻湿条件下恢复1~2小时。 24 hour exposure to a saltspray from the 5%±1 solution. GB/T 5095.6 Method 11f/EIA-364-26B	外观无损伤(五金件应无露出底金属的严重锈蚀; 使用预镀的型材, 其落料面允许有不影响其性能的轻微腐蚀。) Appearance:No Damage(No erosion with material exposed.And with plating material,slight erosion on the cutting surface acceptable)	

项目 Item	测试条件 Test Condition	规格要求 Requirement	
7.可焊性 Solderability	把测试样品需要焊接的部位浸入焊锡炉中 (锡炉温度235℃±5℃)2±0.5秒钟。 Soldering time: 2±0.5 sec Solder Temperature:235℃±5℃ GB/T 5095.6 Method 12a/EIA-364-52	上锡率≥90% 90% of immersed area must show no voids,pin holes	
8. 耐焊接热 Resistance to Soldering Heat	把测试样品需要焊接的部位浸入焊锡炉中(锡炉温度260℃±5℃); 5±1秒钟后, 在正常的条件下恢复1小时。 Soldering time: 5±1 sec Solder Temperature:260℃±5℃ GB/T 5095.6 Method 12d/EIA-364-56A	外观 Appearance	无损伤 No Damage

* 先冲后镀为定制端子。常规端子为先镀后冲, 无法通过盐雾试验。

制订 Edit: 石斛 日期 DATE: 2024-04-25

审核 Check: 天琴 日期 DATE: 2024-04-25

批准 Approval: 季育文 日期 DATE: 2024-04-25

230920340938

中国认可
国际互认
检测
TESTING
CNAS L0599

检测报告

编号：SHAEC24008425816　　日期：2024 年 05 月 07 日　　第 1 页，共 8 页

客户名称：　浙江联和电子有限公司

客户地址：　浙江省乐清市乐清湾港区乐商创业园
浙江省乐清市乐清湾港区电子信息产业园红旗路 8 号

样品名称：　端子 针

客户参考信息：　见附件

以上样品及信息由客户提供。

SGS 工作编号：　TIC1020240424174615KLN9

样品接收时间：　2024 年 04 月 26 日

检测周期：　2024 年 04 月 26 日 ~ 2024 年 05 月 07 日

检测要求：　根据客户要求检测。

检测方法：　见后续页。

检测结果：　见后续页。

检测要求	结论
欧盟 RoHS 指令 2011/65/EU 附录 II 的修正指令(EU) 2015/863-铅、汞、镉和六价铬	符合

通标标准技术服务（上海）有限公司
授权签名

Dora Hu 胡敏
批准签署人

scan to see the report
F5FAA78D

Unless otherwise agreed in writing, this document is issued by the Company subject to its General Conditions of Service printed overleaf, available on request or accessible at http://www.sgs.com/en/Terms-and-Conditions.aspx and, for electronic format documents, subject to Terms and Conditions for Electronic Documents at http://www.sgs.com/en/Terms-and-Conditions/Terms-e-Document.aspx. Attention is drawn to the limitation of liability, indemnification and jurisdiction issues defined therein. Any holder of this document is advised that information contained hereon reflects the Company's findings at the time of its intervention only and within the limits of Client's instructions, if any. The Company's sole responsibility is to its Client and this document does not exonerate parties to a transaction from exercising all their rights and obligations under the transaction documents. This document cannot be reproduced except in full, without prior written approval of the Company. Any unauthorized alteration, forgery or falsification of the content or appearance of this document is unlawful and offenders may be prosecuted to the fullest extent of the law. Unless otherwise stated the results shown in this test report refer only to the sample(s) tested.
Attention: To check the authenticity of testing /inspection report & certificate, please contact us at telephone: (86-755) 8307 1443, or email: CN.Doccheck@sgs.com

3rd Building,No.889 Yishan Road Xuhui District,Shanghai China 200233　t E&E (86-21) 61402553　f E&E (86-21)64953679　www.sgsgroup.com.cn
中国·上海·徐汇区宜山路889号3号楼　邮编: 200233　t HL (86-21) 61402594　f HL (86-21)61156899　e sgs.china@sgs.com

Member of the SGS Group (SGS SA)

检测结果：

检测部件外观描述:

样品序号	样品编号	SGS 样品 ID	样品描述
SN1	A3	SHA24-0084258-0001.C003	银色金属

备注：
(1) 1 mg/kg = 1 ppm = 0.0001%
(2) MDL= 方法检测限
(3) ND = 未检出(< MDL)
(4) "-" = 未规定

欧盟 RoHS 指令 2011/65/EU 附录 II 的修正指令(EU) 2015/863-铅、汞、镉和六价铬

检测方法： 参考 IEC 62321-4:2013+AMD1:2017，IEC 62321-5:2013 和 IEC 62321-7-1:2015，采用 ICP-OES/AAS 和 UV-Vis 进行分析。

检测项目	限值	单位	MDL	A3
铅 (Pb)	1000	mg/kg	2	37
汞 (Hg)	1000	mg/kg	2	ND
镉 (Cd)	100	mg/kg	2	ND
六价铬 (Cr(VI))▼	-	μg/cm²	0.10	ND

备注：
(1) 最大允许极限值引用自RoHS指令(EU) 2015/863。
(2) IEC 62321系列等同于 EN 62321系列。
(3) ▼ = a. 当六价铬的浓度高于0.13 μg/cm²时，样品为阳性，即含有六价铬；
b. 当六价铬的浓度为ND (低于0.10 μg/cm²) 时，样品为阴性，即未检测到六价铬；
c. 当六价铬的浓度介于0.10 μg/cm²与0.13 μg/cm²之间时，无法直接判定是否检测到六价铬，因不同个体的样品表面差异可能会影响测定结果。

由于未获知样品的存储条件和生产日期，样品的六价铬检测结果仅能代表检测时样品含六价铬的状态。

除非另有说明，参照 ILAC-G8:09/2019，使用简单接受（*w*=0）的二元判定规则进行符合性判定。
除非另有说明，此报告结果仅对检测的样品负责。本报告未经本公司书面许可，不可部分复制。

Unless otherwise agreed in writing, this document is issued by the Company subject to its General Conditions of Service printed overleaf, available on request or accessible at http://www.sgs.com/en/Terms-and-Conditions.aspx and, for electronic format documents, subject to Terms and Conditions for Electronic Documents at http://www.sgs.com/en/Terms-and-Conditions/Terms-e-Document.aspx. Attention is drawn to the limitation of liability, indemnification and jurisdiction issues defined therein. Any holder of this document is advised that information contained hereon reflects the Company's findings at the time of its intervention only and within the limits of Client's instructions, if any. The Company's sole responsibility is to its Client and this document does not exonerate parties to a transaction from exercising all their rights and obligations under the transaction documents. This document cannot be reproduced except in full, without prior written approval of the Company. Any unauthorized alteration, forgery or falsification of the content or appearance of this document is unlawful and offenders may be prosecuted to the fullest extent of the law. Unless otherwise stated the results shown in this test report refer only to the sample(s) tested.
Attention: To check the authenticity of testing /inspection report & certificate, please contact us at telephone: (86-755) 8307 1443, or email: CN.Doccheck@sgs.com
3rd Building,No.889 Yishan Road Xuhui District,Shanghai China 200233 t E&E (86-21) 61402553 f E&E (86-21)64953679 www.sgsgroup.com.cn
中国·上海·徐汇区宜山路889号3号楼 邮编: 200233 t HL (86-21) 61402594 f HL (86-21)61156899 e sgs.china@sgs.com
Member of the SGS Group (SGS SA)

附件

元素检测流程图

样品按照下述流程被完全消解

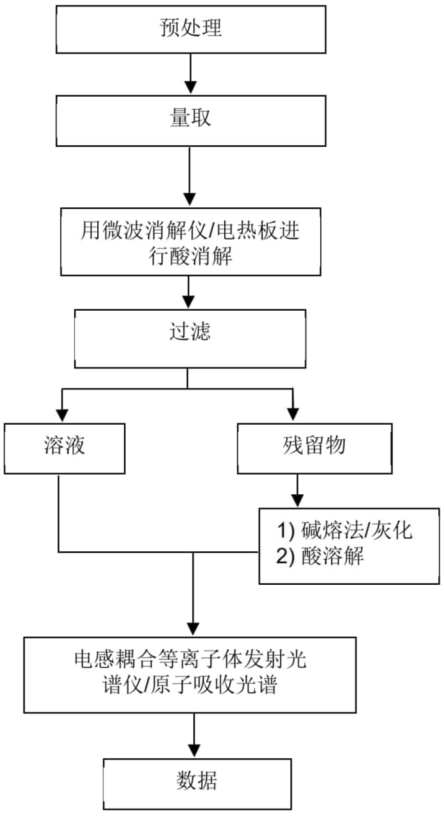

Unless otherwise agreed in writing, this document is issued by the Company subject to its General Conditions of Service printed overleaf, available on request or accessible at http://www.sgs.com/en/Terms-and-Conditions.aspx and, for electronic format documents, subject to Terms and Conditions for Electronic Documents at http://www.sgs.com/en/Terms-and-Conditions/Terms-e-Document.aspx. Attention is drawn to the limitation of liability, indemnification and jurisdiction issues defined therein. Any holder of this document is advised that information contained hereon reflects the Company's findings at the time of its intervention only and within the limits of Client's instructions, if any. The Company's sole responsibility is to its Client and this document does not exonerate parties to a transaction from exercising all their rights and obligations under the transaction documents. This document cannot be reproduced except in full, without prior written approval of the Company. Any unauthorized alteration, forgery or falsification of the content or appearance of this document is unlawful and offenders may be prosecuted to the fullest extent of the law. Unless otherwise stated the results shown in this test report refer only to the sample(s) tested.
Attention: To check the authenticity of testing /inspection report & certificate, please contact us at telephone: (86-755) 8307 1443, or email: CN.Doccheck@sgs.com

3rd Building,No.889 Yishan Road Xuhui District,Shanghai China 200233 t E&E (86-21) 61402553 f E&E (86-21)64953679 www.sgsgroup.com.cn
中国·上海·徐汇区宜山路889号3号楼 邮编: 200233 t HL (86-21) 61402594 f HL (86-21)61156899 e sgs.china@sgs.com

Member of the SGS Group (SGS SA)

附件

六价铬检测流程图

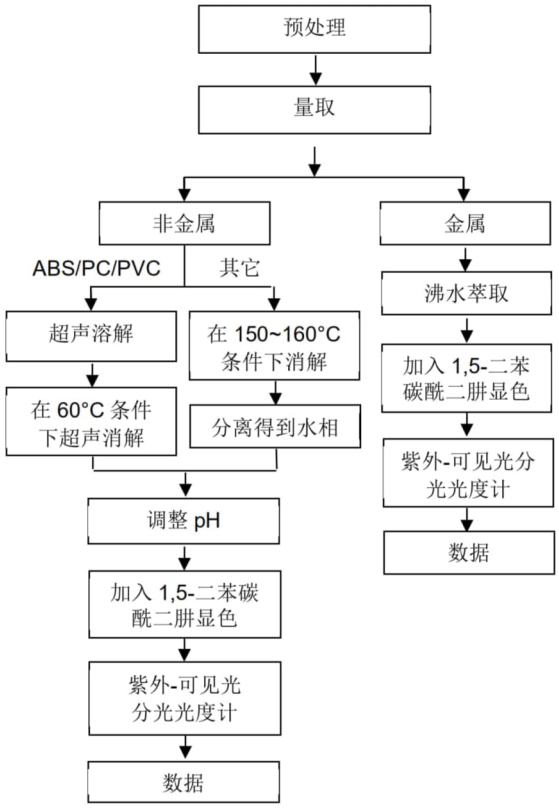

Unless otherwise agreed in writing, this document is issued by the Company subject to its General Conditions of Service printed overleaf, available on request or accessible at http://www.sgs.com/en/Terms-and-Conditions.aspx and, for electronic format documents, subject to Terms and Conditions for Electronic Documents at http://www.sgs.com/en/Terms-and-Conditions/Terms-e-Document.aspx. Attention is drawn to the limitation of liability, indemnification and jurisdiction issues defined therein. Any holder of this document is advised that information contained hereon reflects the Company's findings at the time of its intervention only and within the limits of Client's instructions, if any. The Company's sole responsibility is to its Client and this document does not exonerate parties to a transaction from exercising all their rights and obligations under the transaction documents. This document cannot be reproduced except in full, without prior written approval of the Company. Any unauthorized alteration, forgery or falsification of the content or appearance of this document is unlawful and offenders may be prosecuted to the fullest extent of the law. Unless otherwise stated the results shown in this test report refer only to the sample(s) tested.
Attention: To check the authenticity of testing /inspection report & certificate, please contact us at telephone: (86-755) 8307 1443, or email: CN.Doccheck@sgs.com
3rd Building,No.889 Yishan Road Xuhui District,Shanghai China 200233 t E&E (86-21) 61402553 f E&E (86-21)64953679 www.sgsgroup.com.cn
中国·上海·徐汇区宜山路889号3号楼 邮编: 200233 t HL (86-21) 61402594 f HL (86-21)61156899 e sgs.china@sgs.com
Member of the SGS Group (SGS SA)

SGS

检测报告 编号：SHAEC24008425816 日期：2024 年 05 月 07 日 第 5 页，共 8 页

附件：

1.0, SH, SHD, 1.25, 51021, DF14, DF13, GH, ZH, PH, PHB, PA, PHSD, DF11, C1251, 51047, 51146, FI-S, PHD, YHD200, PA, SMP, SMW, SMH, SMH200, SMH200-H, YH200, 20039WR, 杜邦 2.0, XH/TJC3, XA, HA, XHB, XHD, XHE, EH, EI, 小四 P, 5263, 5264, 5267, 5268, SZN, SAN, SCN, SCND, JC15, JC20, JC25, 5102, 5240, SMH250, SMP250, SMW250, 25048HS, 25045HP, SM, TJC8, 杜邦 2.54, TJC8A, 杜邦带锁, TJC8B, TJC8H, 5051, 2510, 美尚美, 43640, 43645, 43020, 43025, 5500, 5600, VH, VHRR, YH396, VHR, 35156, 2139, 3.96, 90331, 5195, 5196, 39612, FL, 5557, 5559, 5566, 5569, SL, RV42, EL, YL, 小 EL, 8981, 大四 P, 5058, 5.08, L6.2, VL, VLP/VLR, TJC2, TJC2A, TJC2B, TJC4, TJC1, 1806, MX3.0, 1.58, 51005, 51006, BH3.5, BH4.0, 63080, 51004, TJC15, A4203, CL014, OTP, MKH, SMF, Cy-X201, 35108, 35150, 35151, 35224, 35180, 35965, 42021, 42022, 42002, 35955, SA, SCS, 35189, 35196, CH10, CH2.5, 543, SLP, SLR, YHL500, YWL500, FFC, FPC, 20030, 250, LGC, S11, YH025, 35155, 25415, 5197, 5198, 110, 2.8, 6.3, SCS

NH, XHQ, 42474, 42475, QH, NV, 50300, 50301, 5025, 3191, 5199, STV5, YHL500, YWL500, F001, F002, D440, D600, D620, D700, D220, D230, D250, D480, D520, D280, D630, D430, D400, D450, U-T, F1001-T, SIN-T, 774, 773, 778, 294, TU-JTK(SV), TU(SNB), TO-JTK(RV), MDD, FDD, TG-JT, IDC, AUTO, CONNECTOR, DJ70, DT04, DT06, UY/K1, UY2/K2, UR/K3, UR2, UB/K4, UB2A, UG/K5, U1R/K8, U1B/K9, HJKT10, UDW2, 314, A5001, A5002, MC100, FPC2.54, SGN, PHR, ZHR, 205, 5.2, C1801, C1802, 2060, A5003, ME020, ME010, FPC/FFC, B2541, 1971845, 1971846, 2232043, 2232044, 2232511, 1971895, 1971896, JWPF, SY, Molex1.5, ME0100, RAST, A5004, DV, SJN, SDN, 35182, 35524, RCY, LC, VR, SHJ, SHL, DF19, ACH, IL-Z, SATA, XSR, SUR, SUH, ZE, ZND, ZPD, SFH, PUD, AMP2.0, 35507, DF3, PND, RE, RA, RF, SYP/SYR, HIF3, MC100/ME020/ME010, F2541, VHB, VHC, VHD

SHB1.0, NHB1.0, FIS, VHE, 35313, 30PIN, PR9-409, PR5-70-1, PR5-24, 5240B, 5500B, 5600B,13006,13007, 3DLG06FW, 1719057, 1719058, 1719059, CS28H, 9102501, 9103101, 9111001, PP0311401, 33EMMT26FBK, 3CN2BH02, 3FW06FBM, PP0426613, PP0426202, GIC3.3, 1376421-1, XADR, XADRR, 179846, 179849, XHR, 50235, PAD, PNI, SDL2.5, PS-250-2A-15, 4.8, 62306, H9002, DC4235, 62308, 62420-1, B35E0, 63658-1, 1060-16-0122, RH0409000142, RH011810030061, RH040499000142, RH011810030090, 299900421692, 33146412, 1.25 插板, SPS-01T-110, 282104-1, 282105-1, 282110-1, 282109-1, 21T1000501, 20T1001001, PP043531T, XNIRP, XL, 1123343-1, DF16, 1473413-1, 12147302, MG641234-5, PHBS,0.8, Molex1.2, 35746, 35748, APM2.54

1969738, 1969740, 1971845, 1971846, 1971895, 1971896, 1971946 thru 1971949, 1971954 thru 1971957, 2232008 thru 2232011, 2232000 thru 2232003, 2232016 thru 2232019, 1971962 thru 1971965, 2232024 thru 2232027, 2232289 thru 2232292, 2232043 thru 2232074, 2232298 thru 2232301, 2232511, 2232532, 2232557, 2232559, 2232560, 2232562, 2232563, 2232565, 2232566, 2232568, 2232569, 2232571, 2232572, 2232574, 2232575, 2232577, 2232578, 2232580, 2232581, 2232583, 2232584, 2232586, 2232587, 2232589, 2232590, 2232592, 2232593, 2232595, 2232596, 2232598, 2232599, 2232601, 2232602, 2232604, 2232605, 2232607, 2232608, 2232611 thru 2232682, 2292457, 2292458, 1064,2064,3064,1080,2080,3080,1100,2100,3100,1120, 2120,3120,1150,2150,3150, 1180,2180,3180,1230,2230, 3230,1250,2250,3250,1280,2280,3280,1300,2300,3300, 1480,2480,3480, 1630,2630,3630,1780,2780,3780,1950, 2950,3950,1010,2010,3010,1013,2013,3013,1015,2015, 3015, 1016,2016,3016,1025,2025,3025,1035,2035,3035, 1045,2045,3045,1058,2058,3058,1999,2999,3999, 401,402,403,503,TPA,BX,CPA, 404, 501, 502

A1001 A1002 A1003 A1004 A1005 A1006 A1007 A1008 A1009
A1251 A1252 A1253 A1254 A1255 A1256 A1257 A1258 A1259
A1501 A1502 A1503 A1504 A1505 A1506 A1507 A1508 A1509
A2001 A2002 A2003 A2004 A2005 A2006 A2007 A2008 A2009

Unless otherwise agreed in writing, this document is issued by the Company subject to its General Conditions of Service printed overleaf, available on request or accessible at http://www.sgs.com/en/Terms-and-Conditions.aspx and, for electronic format documents, subject to Terms and Conditions for Electronic Documents at http://www.sgs.com/en/Terms-and-Conditions/Terms-e-Document.aspx. Attention is drawn to the limitation of liability, indemnification and jurisdiction issues defined therein. Any holder of this document is advised that information contained hereon reflects the Company's findings at the time of its intervention only and within the limits of Client's instructions, if any. The Company's sole responsibility is to its Client and this document does not exonerate parties to a transaction from exercising all their rights and obligations under the transaction documents. This document cannot be reproduced except in full, without prior written approval of the Company. Any unauthorized alteration, forgery or falsification of the content or appearance of this document is unlawful and offenders may be prosecuted to the fullest extent of the law. Unless otherwise stated the results shown in this test report refer only to the sample(s) tested.
Attention: To check the authenticity of testing /inspection report & certificate, please contact us at telephone: (86-755) 8307 1443, or email: CN.Doccheck@sgs.com

3rd Building,No.889 Yishan Road Xuhui District,Shanghai China 200233 t E&E (86-21) 61402553 f E&E (86-21)64953679 www.sgsgroup.com.cn
中国·上海·徐汇区宜山路889号3号楼 邮编: 200233 t HL (86-21) 61402594 f HL (86-21)61156899 e sgs.china@sgs.com

Member of the SGS Group (SGS SA)

SGS

检测报告 编号：SHAEC24008425816 日期：2024 年 05 月 07 日 第 6 页，共 8 页

A2010	A2011	A2012	A2013	A2014	A2015	A2016	A2017	A2018
A2501	A2502	A2503	A2504	A2505	A2506	A2507	A2508	A2509
A25010	A25011	A25012	A25013	A25014	A25015	A25016	A25017	A25018
A2541	A2542	A2543	A2544	A2545	A2546	A2547	A2548	A2549
A3001	A3002	A3003	A3004	A3005	A3006	A3007	A3008	A3009
A3301	A3302	A3303	A3304	A3305	A3306	A3307	A3308	A3309
A3961	A3962	A3963	A3964	A3965	A3966	A3967	A3968	A3969
A4201	A4202	A4203	A4204	A4205	A4206	A4207	A4208	A4209
A5001	A5002	A5003	A5004	A5005	A5006	A5007	A5008	A5009
A5081	A5082	A5083	A5084	A5085	A5086	A5087	A5088	A5089
A6501	A6502	A6503	A6504	A6505	A6506	A6507	A6508	A6509
B1251	B1252	B1253	B1254	B1255	B1256	B1257	B1258	B1259
B1501	B1502	B1503	B1504	B1505	B1506	B1507	B1508	B1509
B2001	B2002	B2003	B2004	B2005	B2006	B2007	B2008	B2009
B2501	B2502	B2503	B2504	B2505	B2506	B2507	B2508	B2509
B2541	B2542	B2543	B2544	B2545	B2546	B2547	B2548	B2549
B76201	B76202	B76203	B76204	B76205	B76206	B76207	B76208	B76209
B13001	B13002	B13003	B13004	B13005	B13006	B13007	B13008	B13009
C01581	C01582	C01583	C01584	C01585	C01586	C01587	C01588	C01589
C1251	C1252	C1253	C1254	C1255	C1256	C1257	C1258	C1259
C1501	C1502	C1503	C1504	C1505	C1506	C1507	C1508	C1509
C2001	C2002	C2003	C2004	C2005	C2006	C2007	C2008	C2009
C2501	C2502	C2503	C2504	C2505	C2506	C2507	C2508	C2509
C25010	C25011	C25012	C25013	C25014	C25015	C25016	C25017	C25018
C2541	C2542	C2543	C2544	C2545	C2546	C2547	C2548	C2549
C3001	C3002	C3003	C3004	C3005	C3006	C3007	C3008	C3009
C3501	C3502	C3503	C3504	C3505	C3506	C3507	C3508	C3509
C3681	C3682	C3683	C3684	C3685	C3686	C3687	C3688	C3689
C3961	C3962	C3963	C3964	C3965	C3966	C3967	C3968	C3969
C4001	C4002	C4003	C4004	C4005	C4006	C4007	C4008	C4009
C4141	C4142	C4143	C4144	C4145	C4146	C4147	C4148	C4149
C4201	C4202	C4203	C4204	C4205	C4206	C4207	C4208	C4209
C4501	C4502	C4503	C4504	C4505	C4506	C4507	C4508	C4509
C5001	C5002	C5003	C5004	C5005	C5006	C5007	C5008	C5009
C6201	C6202	C6203	C6204	C6205	C6206	C6207	C6208	C6209
C6351	C6352	C6353	C6354	C6355	C6356	C6357	C6358	C6359
D2801	D2802	D2803	D2804	D2805	D2806	D2807	D2808	D2809
D4801	D4802	D4803	D4804	D4805	D4806	D4807	D4808	D4809
D5201	D5202	D5203	D5204	D5205	D5206	D5207	D5208	D5209
D6301	D6302	D6303	D6304	D6305	D6306	D6307	D6308	D6309
D6201	D6202	D6203	D6204	D6205	D6206	D6207	D6208	D6209
D7001	D7002	D7003	D7004	D7005	D7006	D7007	D7008	D7009
F0501	F0502	F0503	F0504	F0505	F0506	F0507	F0508	F0509
F05010	F05011	F05012	F05013	F05014	F05015	F05016	F05017	F05018
F1001	F1002	F1003	F1004	F1005	F1006	F1007	F1008	F1009
F10010	F10011	F10012	F10013	F10014	F10015	F10016	F10017	F10018
F2541	F2542	F2543	F2544	F2545	F2546	F2547	F2548	F2549
P0001	P0002	P0003	P0004	P0005	P0006	P0007	P0008	P0009
P0010	P0011	P0012	P0013	P0014	P0015	P0016	P0017	P0018
P0019	P0020	P0021	P0022	P0023	P0024	P0025	P0026	P0027

检验检测专用章 Inspection & Testing Services

Unless otherwise agreed in writing, this document is issued by the Company subject to its General Conditions of Service printed overleaf, available on request or accessible at http://www.sgs.com/en/Terms-and-Conditions.aspx and, for electronic format documents, subject to Terms and Conditions for Electronic Documents at http://www.sgs.com/en/Terms-and-Conditions/Terms-e-Document.aspx. Attention is drawn to the limitation of liability, indemnification and jurisdiction issues defined therein. Any holder of this document is advised that information contained hereon reflects the Company's findings at the time of its intervention only and within the limits of Client's instructions, if any. The Company's sole responsibility is to its Client and this document does not exonerate parties to a transaction from exercising all their rights and obligations under the transaction documents. This document cannot be reproduced except in full, without prior written approval of the Company. Any unauthorized alteration, forgery or falsification of the content or appearance of this document is unlawful and offenders may be prosecuted to the fullest extent of the law. Unless otherwise stated the results shown in this test report refer only to the sample(s) tested.
Attention: To check the authenticity of testing /inspection report & certificate, please contact us at telephone: (86-755) 8307 1443, or email: CN.Doccheck@sgs.com

3rd Building,No.889 Yishan Road Xuhui District,Shanghai China 200233 t E&E (86-21) 61402553 f E&E (86-21)64953679 www.sgsgroup.com.cn
中国·上海·徐汇区宜山路889号3号楼 邮编: 200233 t HL (86-21) 61402594 f HL (86-21)61156899 e sgs.china@sgs.com

Member of the SGS Group (SGS SA)

SGS

检测报告 编号：SHAEC24008425816 日期：2024 年 05 月 07 日 第 7 页，共 8 页

D2301 D2302 D2303 D2304 D2305 D2306 D2307 D2308 D2309
D6001 D6002 D6003 D6004 D6005 D6006 D6007 D6008 D6009
D2201 D2202 D2203 D2204 D2205 D2206 D2207 D2208 D2209
B10901 B13601 C6001 C6002 C6003 C6004 A20010 A20011 P0028
P0029 P0030 P0031 B11001 C2201 C2202 C4101 C6701 C6702
D630J D700G A20012 P0032 B4001 A0801 A1271 A1803
A10001 A4141 A7501 A7502 A3501 A1201 A4001 A6351 B14501
A20013 A1202 D2501 A1801 A1802

检验检测专用章 Inspection & Testing Services

Unless otherwise agreed in writing, this document is issued by the Company subject to its General Conditions of Service printed overleaf, available on request or accessible at http://www.sgs.com/en/Terms-and-Conditions.aspx and, for electronic format documents, subject to Terms and Conditions for Electronic Documents at http://www.sgs.com/en/Terms-and-Conditions/Terms-e-Document.aspx. Attention is drawn to the limitation of liability, indemnification and jurisdiction issues defined therein. Any holder of this document is advised that information contained hereon reflects the Company's findings at the time of its intervention only and within the limits of Client's instructions, if any. The Company's sole responsibility is to its Client and this document does not exonerate parties to a transaction from exercising all their rights and obligations under the transaction documents. This document cannot be reproduced except in full, without prior written approval of the Company. Any unauthorized alteration, forgery or falsification of the content or appearance of this document is unlawful and offenders may be prosecuted to the fullest extent of the law. Unless otherwise stated the results shown in this test report refer only to the sample(s) tested.
Attention: To check the authenticity of testing /inspection report & certificate, please contact us at telephone: (86-755) 8307 1443, or email: CN.Doccheck@sgs.com

3rd Building,No.889 Yishan Road Xuhui District,Shanghai China 200233 t E&E (86-21) 61402553 f E&E (86-21)64953679 www.sgsgroup.com.cn
中国·上海·徐汇区宜山路889号3号楼 邮编: 200233 t HL (86-21) 61402594 f HL (86-21)61156899 e sgs.china@sgs.com

Member of the SGS Group (SGS SA)

SGS

检测报告 编号：SHAEC24008425816 日期：2024 年 05 月 07 日 第 8 页，共 8 页

样品照片：

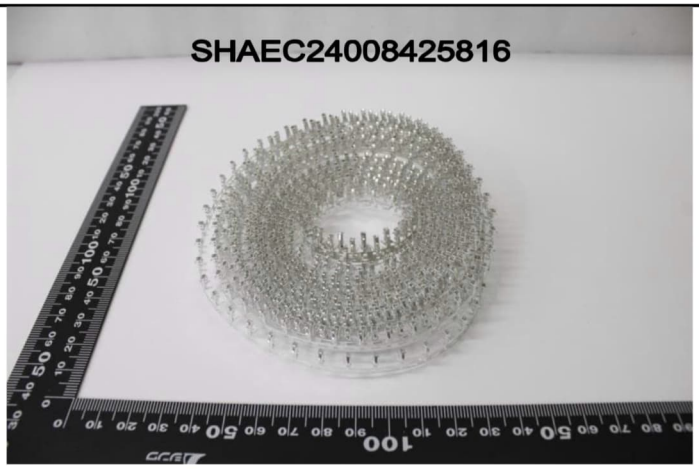

SHA24-0084258-0001.C003

此照片仅限于随 SGS 正本报告使用

报告结束

检验检测专用章 Inspection & Testing Services

Unless otherwise agreed in writing, this document is issued by the Company subject to its General Conditions of Service printed overleaf, available on request or accessible at http://www.sgs.com/en/Terms-and-Conditions.aspx and, for electronic format documents, subject to Terms and Conditions for Electronic Documents at http://www.sgs.com/en/Terms-and-Conditions/Terms-e-Document.aspx. Attention is drawn to the limitation of liability, indemnification and jurisdiction issues defined therein. Any holder of this document is advised that information contained hereon reflects the Company's findings at the time of its intervention only and within the limits of Client's instructions, if any. The Company's sole responsibility is to its Client and this document does not exonerate parties to a transaction from exercising all their rights and obligations under the transaction documents. This document cannot be reproduced except in full, without prior written approval of the Company. Any unauthorized alteration, forgery or falsification of the content or appearance of this document is unlawful and offenders may be prosecuted to the fullest extent of the law. Unless otherwise stated the results shown in this test report refer only to the sample(s) tested.
Attention: To check the authenticity of testing /inspection report & certificate, please contact us at telephone: (86-755) 8307 1443, or email: CN.Doccheck@sgs.com

3rd Building,No.889 Yishan Road Xuhui District,Shanghai China 200233 t E&E (86-21) 61402553 f E&E (86-21)64953679 www.sgsgroup.com.cn
中国·上海·徐汇区宜山路889号3号楼 邮编: 200233 t HL (86-21) 61402594 f HL (86-21)61156899 e sgs.china@sgs.com

Member of the SGS Group (SGS SA)

编号：LHE-S006

成品 MSDS

1．物品成分与厂商资料		
厂商名称：浙江联和电子有限公司		物品编号：LHE-WF1001
		物品名称：黄铜镀锡针
地址：浙江省温州乐清市乐清湾港区创新路8号		纯物质：
联络电话：0577-62383699		危害物质成分（%）无
2.成份辨识资料		
成份名称	化学文摘社登记号码(CAS No.)	浓度范围（成分百分比 Percentage (%)
铜(Cu)	7440-50-8	64.9%
磷(P)	7723-14-0	0.001%
锌(Zn)	7440-66-6	余量
镍(Ni)	7440-02-0	0.01%
锑（Sb）	7440-36-0	0.001%
铅(Pb)	7439-92-1	＜0.009%
铁(Fe)	7439-89-6	＜0.1%
纯镍(Ni)	7440-02-0	0.05%
纯锡(Sn)	7440-31-5	0.1%
2．危害辨认资料		
严重危害效应	健康危害效应：本产品在固体时不具健康危害及危害	
	环境影响：本产品在固体时对环境不具影响	
	物理性及化学性危害:固体/无味/多色	
	特殊危害：固体时（防火或高温）无特殊危害	
主要症状：无		
3．急救措施		
急救方法	吸入：无吸入	
	皮肤接触：接触无危害	
	食入：无食入	
主要症状及危害效应：无		
4．灭火措施		
通用灭火器：二氧化碳，泡沫，干粉化学灭火器，水雾等		
灭火时可能遭遇之特殊危害：会引起火灾		
消防人员之特殊防护装备：使用从氧式吸防护具		
5．泄漏处理方法		
个人应注意事项：注意工作台面清洁，作业时及时清洗手		
环境注意事项：将泄漏之物料以容器盛装以便回收或废弃		
清理方式：工作台面每天作业前/后须檫试干净，建议可以戴手套或手指套作业		
6．安全处置与储存方法		
处置：废弃物可送到政府许可的废弃物处理中心进行处理		

储存：空调仓，23±5℃，湿度 65%以下，仓库里面安装灭火器		
7. 暴露预防措施		
个人防护设备	呼吸防护：口罩，一般无此要求，可以建议采用	
	手部防护设备：手套火手指套，一般无此要求，可以建议采用	
	眼睛防护：安全目镜或眼镜	
	皮肤及身体防护：穿工作服，经常勤洗	
卫生措施：建议使用安全目镜，进食前应洗手及脸部，平时多运动，保持健康体力		
8. 物料及化学性质		
物质状态：固体	形状：连接器	
颜色：多色	气味：无味	
PH 值：未测定	沸点：未测定	
分解温度：未测定	爆炸介限：无	
自然温度：固体无	溶解度：固体无	
9. 安全性及反应性		
安全性：正常状态下安全		
特殊状况下可能之危害反应：无		
应避免之状况：避免接触火源和太阳光直照射		
应避免之物质：火和酸碱性物质		
危害分解物：无		
10. 毒性资料		
急毒性	吸人：无	
	皮肤接触：无	
	眼睛：无	
局部效应：无	特殊效应：无	
11. 废弃物处理方法：废弃物可送到政府许可的废弃物处理中心进行处理		
12. 运送资料		
联合国编号：无	运输规定：并无危险分类	
运送方法及注意事项：勿重压，轻拿轻放		
13. 适用法规：1.劳工安全卫生设施规划；2.危害物及有害物通讯规划；3.索尼环境通用规定；4 劳工用业环境空气中有害物容许溶度标准；5 道路交通安全规划		
14. 其他资料：		
15.法规资料		
适用法规	1.劳工安全卫生设施规则 2.RoHS 法规及有害物通识规则	
16.其它资料		
参考文献	有害化学物质中文资料库，环保局	
制表单位	浙江联和电子有限公司	
制造商及供应商地址	浙江省温州乐清市乐清湾港区创新路8号	
电话	0577-62383699	
制表者	陈浙海	
制表日期	2022-3-23	