MX3.0型连接器承认书图面

名　　称	材　　料	附　　注
基座 Housing	Nylon 66 UL94V-0	

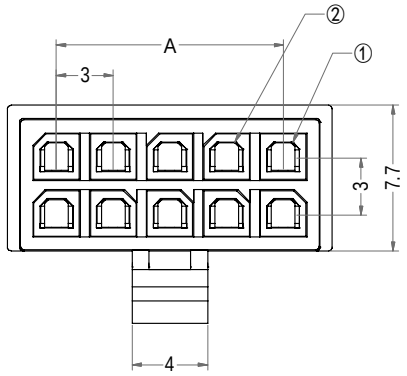

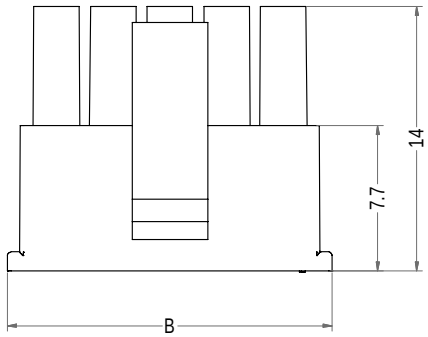

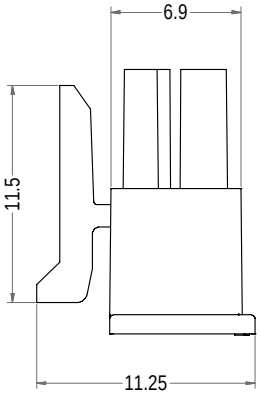

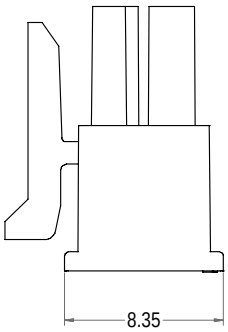

C3001-HB02×2~12×2

Poles	Part No.	Description	DIM=A	DIM=B
2	C3001-H01×2	MX3.0-2×1Y	-	5.20
4	C3001-H02×2	MX3.0-2×2Y	3.00	8.20
6	C3001-H03×2	MX3.0-2×3Y	6.00	11.20
8	C3001-H04×2	MX3.0-2×4Y	9.00	14.20
10	C3001-H05×2	MX3.0-2×5Y	12.00	17.20
12	C3001-H06×2	MX3.0-2×6Y	15.00	20.20
14	C3001-H07×2	MX3.0-2×7Y	18.00	23.20
16	C3001-H08×2	MX3.0-2×8Y	21.00	26.20
18	C3001-H09×2	MX3.0-2×9Y	24.00	29.20
20	C3001-H10×2	MX3.0-2×10Y	27.00	32.20
22	C3001-H11×2	MX3.0-2×11Y	30.00	35.20
24	C3001-H12×2	MX3.0-2×12Y	33.00	38.20
2	C3001-HB01×2	MX3.0-2×1YB	-	3.90
4	C3001-HB02×2	MX3.0-2×2YB	3.00	6.90
6	C3001-HB03×2	MX3.0-2×3YB	6.00	9.90
8	C3001-HB04×2	MX3.0-2×4YB	9.00	12.90
10	C3001-HB05×2	MX3.0-2×5YB	12.00	15.90
12	C3001-HB06×2	MX3.0-2×6YB	15.00	18.90
14	C3001-HB07×2	MX3.0-2×7YB	18.00	21.90
16	C3001-HB08×2	MX3.0-2×8YB	21.00	24.90
18	C3001-HB09×2	MX3.0-2×9YB	24.00	27.90
20	C3001-HB10×2	MX3.0-2×10YB	27.00	30.90
22	C3001-HB11×2	MX3.0-2×11YB	30.00	33.90
24	C3001-HB12×2	MX3.0-2×12YB	33.00	36.90

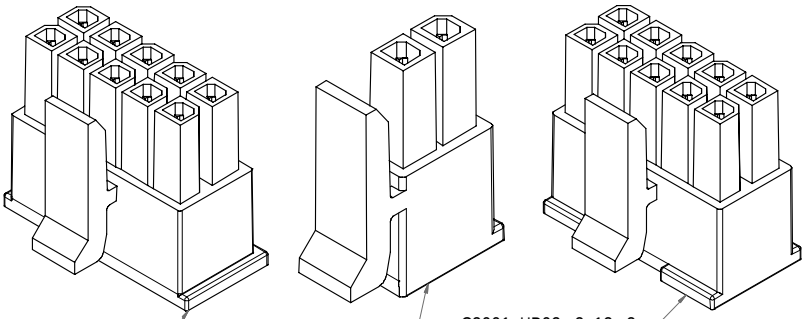

3D图示

LHE® 浙江联和电子有限公司			
品名	MX3.0-2×Y*	比例	5 : 2
料号	C3001-H*×2	未注公差(mm)	
图号	/	>0~3	±0.12
材料	Nylon 66 UL94V-0	>3~18	±0.15
制图	2026-05-13	>18~50	±0.3
审核	2026-05-13	>50~120	±0.5
批准	2026-05-13	X°	±3°
视角		X.X°	±0.5°