# PHBS型连接器承认书图面

| 名　　称 | 材　　料 | 附　　注 |
|---|---|---|
| 基座 Housing | Nylon 66 UL94V-0 | White(白色) |

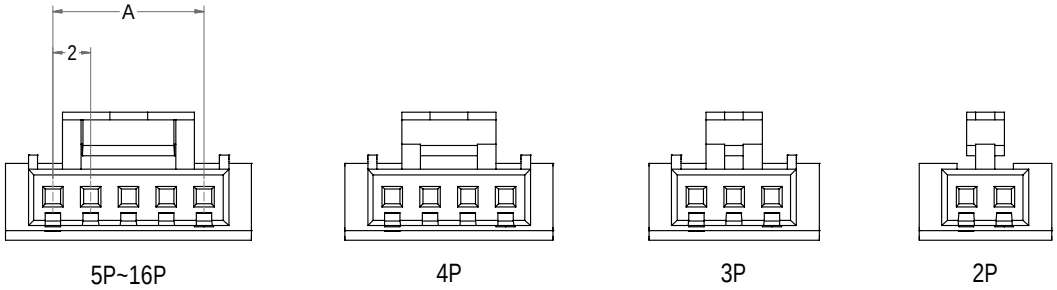


5P~16P　　4P　　3P　　2P

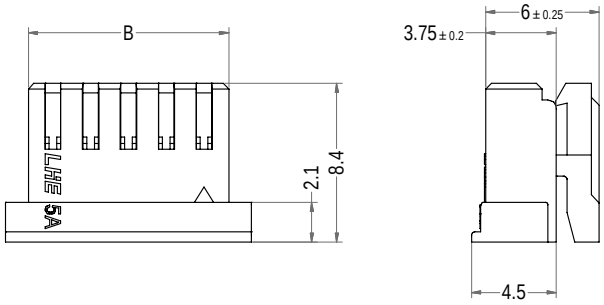


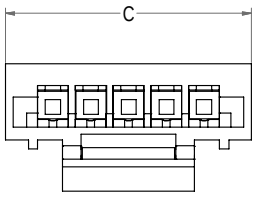


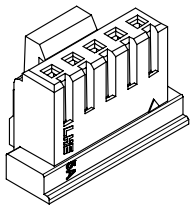

3D图示

| Poles | Part No. | Description | A | B | C |
|---|---|---|---|---|---|
| 2 | A20012-HB02 | PHBS-2YB | 2.00 | 4.60 | 7.00 |
| 3 | A20012-HB03 | PHBS-3YB | 4.00 | 6.60 | 9.00 |
| 4 | A20012-HB04 | PHBS-4YB | 6.00 | 8.60 | 11.00 |
| 5 | A20012-HB05 | PHBS-5YB | 8.00 | 10.60 | 13.00 |
| 6 | A20012-HB06 | PHBS-6YB | 10.00 | 12.60 | 15.00 |
| 7 | A20012-HB07 | PHBS-7YB | 12.00 | 14.60 | 17.00 |
| 8 | A20012-HB08 | PHBS-8YB | 14.00 | 16.60 | 19.00 |
| 9 | A20012-HB09 | PHBS-9YB | 16.00 | 18.60 | 21.00 |
| 10 | A20012-HB10 | PHBS-10YB | 18.00 | 20.60 | 23.00 |
| 11 | A20012-HB11 | PHBS-11YB | 20.00 | 22.60 | 25.00 |
| 12 | A20012-HB12 | PHBS-12YB | 22.00 | 24.60 | 27.00 |
| 13 | A20012-HB13 | PHBS-13YB | 24.00 | 26.60 | 29.00 |
| 14 | A20012-HB14 | PHBS-14YB | 26.00 | 28.60 | 31.00 |
| 15 | A20012-HB15 | PHBS-15YB | 28.00 | 30.60 | 33.00 |
| 16 | A20012-HB16 | PHBS-16YB | 30.00 | 32.60 | 35.00 |

| LHE® 浙江联和电子有限公司 | | | |
|---|---|---|---|
| 品名 | PHBS-YB | 比例 | 5 : 2 |
| 料号 | A20012-HB | 未注公差(mm) | |
| 图号 | / | >0~3 | ±0.12 |
| 材料 | Nylon 66 UL94V-0 | >3~18 | ±0.15 |
| 制图 | 石 尉 2024-09-01 | >18~50 | ±0.3 |
| 审核 | 天琴 2024-09-01 | >50~120 | ±0.5 |
| 批准 | 季育文 2024-09-01 | X° | ±3° |
| 视角 | | X.X° | ±0.5° |